ECOSYS®

> PRINT > COPY > SCAN > FAX

ECOSYS M2735dn

> PRINT > COPY > SCAN

ECOSYS M2235dn

OPERATION GUIDE



KYOCERA
Document Solutions

Preface

Thank you for purchasing this machine.

This Operation Guide is intended to help you operate the machine correctly, perform routine maintenance, and take simple troubleshooting measures as needed so that the machine can always be used in the optimum condition.

Please read this Operation Guide before using the machine.

To maintain quality, we recommend using genuine Kyocera toner containers, which must pass numerous quality inspections.

The use of non-genuine toner containers may cause failure.

We will not be liable for any damages caused by the use of third party supplies in this machine.

A label is affixed to our replacement genuine toner containers, as shown below.

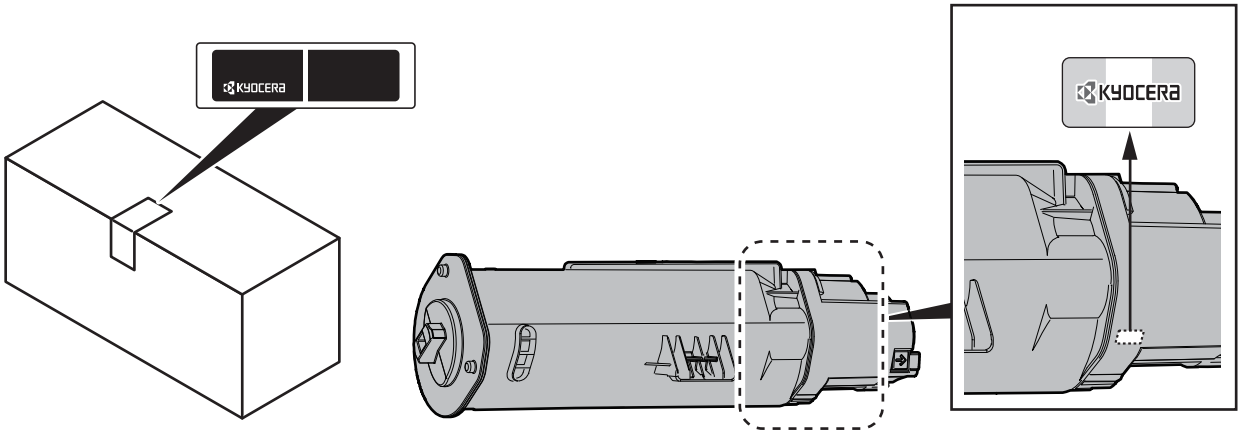

Checking the Equipment's Serial Number

The equipment's serial number is printed in the location shown in the figure.

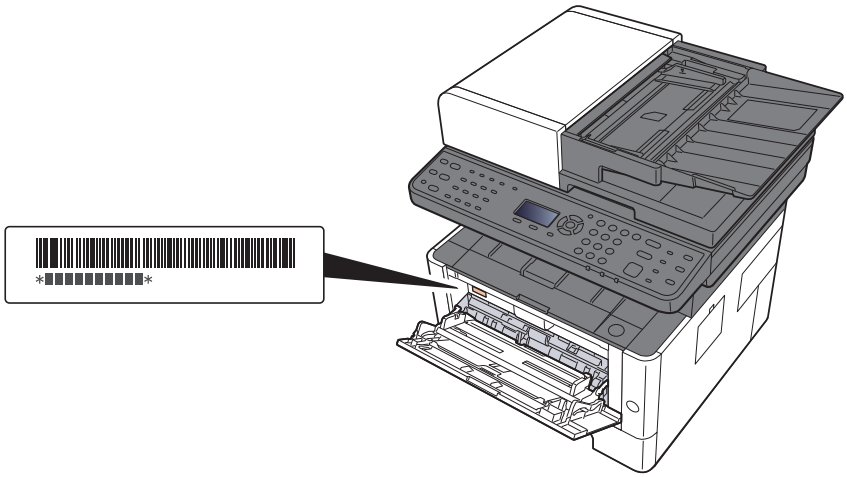

You'll need the equipment's serial number when contacting your Service Representative. Please check the number before contacting your Service Representative.

Contents

Preface ..... **i**
Contents ..... **ii**
Overview ..... **ix**
Machine Features ..... **x**
Color and Image Quality Functions ..... **xiv**
Basic Color Modes xiv
Adjusting Image Quality and Color xv
Guides Provided with the Machine ..... **xvi**
About the Operation Guide (this Guide) ..... **xviii**
Structure of the guide xviii
Conventions Used in This Guide xix
Menu Map ..... **xxi**

1 Legal and Safety Information 1-1
Notice **1-2**
Safety Conventions in This Guide 1-2
Environment 1-3
Precautions for Use 1-4
Laser Safety (Europe) 1-5
Legal Restriction on Copying/Scanning 1-6
EN ISO 7779 1-6
EK1-ITB 2000 1-6
Legal Information 1-7
Energy Saving Control Function 1-13
Automatic 2-Sided Print Function 1-13
Resource Saving - Paper 1-13
Environmental benefits of "Power Management" 1-13
Energy Star (ENERGY STAR®) Program 1-13

2 Installing and Setting up the Machine 2-1
Part Names (Machine Exterior) **2-2**
Part Names (Connectors/Interior) **2-4**
Part Names (With Optional Equipments Attached) **2-6**
Connecting the Machine and Other Devices **2-7**
Connecting Cables **2-8**
Connecting LAN Cable 2-8
Connecting USB Cable 2-9
Connecting the Power Cable 2-9
Power On/Off **2-10**
Power On 2-10
Power Off 2-10
Using the Operation Panel **2-11**
Operation Panel Keys 2-11
Operation Method 2-13
Check the original and paper settings 2-14
Help Screen 2-14
Login/Logout **2-15**
Login 2-15
Logout 2-16
Default Settings of the Machine **2-17**
Setting Date and Time 2-17
Network Setup **2-18**
Configuring the Wired Network 2-18
Energy Saver function **2-20**
Sleep 2-20
Auto Sleep 2-21

Sleep Rules (models for Europe) 2-21
Sleep Level (Energy Saver and Quick Recovery) (models except for Europe) 2-22
Power Off Rule (models for Europe) 2-22
Quiet Mode 2-23
Installing Software 2-24
Software on DVD (Windows) 2-24
Installing Software in Windows 2-25
Uninstalling the Software 2-31
Installing Software in Mac Computer 2-32
Setting TWAIN Driver 2-34
Setting WIA Driver 2-36
Checking the Counter 2-37
Additional Preparations for the Administrator 2-38
Sending Documents to a PC 2-38
Strengthening the Security 2-38
Command Center RX 2-39
Accessing Command Center RX 2-40
Changing Security Settings 2-41
Changing Device Information 2-43
E-mail Settings 2-45
Registering Destinations 2-49
Transferring Data from Our Other Products 2-50
Migrating the Address Book 2-50

3 Preparation before Use 3-1

Loading Paper 3-2
Precaution for Loading Paper 3-2
Selecting the Paper Feeder Units 3-3
Loading in the Cassette 3-4
Precautions for Outputting Paper 3-7
Paper Stopper 3-7
Preparation for Sending a Document to a Shared Folder in a PC 3-8
Making a note of the computer name and full computer name 3-8
Making a note of the user name and domain name 3-9
Creating a Shared Folder, Making a Note of a Shared Folder 3-10
Configuring Windows Firewall 3-13
Registering Destinations in the Address Book 3-18
Adding a Destination (Address Book) 3-18
Adding a Destination on One Touch Key (One Touch Key) 3-25

4 Printing from PC 4-1

Printer Driver Properties Screen 4-2
Displaying the Printer Driver Help 4-3
Changing the Default Printer Driver Settings (Windows 8.1) 4-3
Printing from PC 4-4
Printing on Standard Sized Paper 4-4
Printing on Non-standard Sized Paper 4-6
Canceling Printing from a Computer 4-8
Printing from the Handheld Device 4-9
Printing by AirPrint 4-9
Printing by Google Cloud Print 4-9
Printing by Mopria 4-9
Printing Data Saved in the Printer 4-10
Specifying the Job Box from a Computer and Storing the Job 4-10
Printing Documents from Private Print Box 4-11
Deleting the Documents Stored in the Private Print Box 4-11
Printing Document from Stored Job Box 4-12
Deleting the Documents Stored in the Stored Job Box 4-13

Printing Document from Quick Copy Box 4-14
Deleting the Documents Stored in the Quick Copy Box 4-14
Printing Document from Proof and Hold Box 4-15
Deleting the Documents Stored in the Proof and Hold Box 4-16
Monitoring the Printer Status (Status Monitor) 4-17
Accessing the Status Monitor 4-17
Exiting the Status Monitor 4-17
Quick View State 4-17
Printing Progress Tab 4-18
Paper Tray Status Tab 4-18
Toner Status Tab 4-18
Alert Tab 4-19
Status Monitor Context Menu 4-19
Status Monitor Notification Settings 4-20
Configuration Tool 4-21
Accessing the Configuration Tool 4-21
Exiting the Configuration Tool 4-22
Configuration Tool Settings Screen 4-23

5 Operation on the Machine 5-1

Loading Originals 5-2
Placing Originals on the Platen 5-2
Loading Originals in the Document Processor 5-3
Loading Paper in the Multipurpose Tray 5-5
Program 5-8
Registering Programs 5-8
Recalling Program 5-9
Overwriting Program 5-10
Deleting Program 5-10
Select Key Settings 5-11
Copying 5-12
Basic Operation 5-12
Canceling Jobs 5-13
Frequently-Used Sending Method 5-14
Sending Document via E-mail 5-15
Configuring Settings before Sending 5-15
Sending Scanned Document via E-mail 5-15
Sending Document to Desired Shared Folder on a Computer (Scan to PC) 5-16
Configuring Settings before Sending 5-16
Sending Document to Desired Shared Folder on a Computer 5-16
Sending Document to Folder on an FTP Server (Scan to FTP) 5-18
Configuring Settings before Sending 5-18
Sending Document to Folder on an FTP Server 5-18
Scanning using TWAIN or WIA 5-20
Configuring Settings before Sending 5-20
Scanning Document Using Application 5-20
Useful Sending Method 5-21
WSD Scan 5-22
Installing Driver Software 5-22
WSD scan 5-23
Using fax server to send a fax (fax server transmission) 5-25
Configuring Settings before Sending 5-25
Using fax server to send a fax 5-25
Sending to Different Types of Destinations (Multi Sending) 5-27
Send to Me (E-mail) 5-28
Sending a document to the mail address of the logged in user 5-28

Canceling Sending Jobs **5-29**
Handling Destination **5-30**
Specifying Destination 5-30
Choosing from the Address Book 5-30
Choosing from the External Address Book 5-31
Choosing from the One Touch Key 5-32
Checking and Editing Destinations 5-33
Confirmation Screen of Destinations 5-34
Recall 5-34
How to use the FAX Function **5-35**
Using Document Boxes **5-36**
What is Job Box? 5-36
What is Removable Memory Box? 5-36
What is Sub Address Box/Polling Box? 5-36
Operating using Removable USB Memory **5-37**
Printing Documents Stored in Removable USB Memory 5-37
Saving Documents to USB Memory (Scan to USB) 5-39
Check the USB Memory Information 5-40
Removing USB Memory 5-40

6 Using Various Functions 6-1
Functions Available on the Machine **6-2**
About Functions Available on the Machine 6-2
How to Select Functions 6-2
Copy 6-3
Send 6-4
Removable Memory (Store File, Printing Documents) 6-5
Functions **6-7**
Paper Selection 6-8
Collate 6-9
Duplex 6-9
Zoom 6-11
Combine 6-13
Original Size 6-15
Original Orientation 6-15
Mixed Size Originals 6-16
Original Image 6-16
Density 6-17
EcoPrint 6-17
Continuous Scan 6-17
File Name Entry 6-18
Job Finish Notice 6-18
Priority Override 6-18
Color Selection 6-19
Sharpness 6-19
Contrast 6-20
Background Density Adj. (Background Density Adjustment) 6-20
Skip Blank Page 6-21
Scan Resolution 6-21
Sending Size 6-22
File Format 6-23
Subject/Body 6-27
FTP Encrypted TX 6-27
File Separation 6-27
Storing Size 6-28
Encrypted PDF 6-28
JPEG/TIFF Print 6-29
XPS Fit to Page 6-29

7 Status/Job Cancel 7-1

Checking Job Status 7-2
Details of the Status Screens 7-4
Checking Job History 7-8
Sending the Log History 7-12
Job Operation 7-13
Pause and Resumption of Jobs 7-13
Canceling of Jobs 7-13
Device/Communication 7-14
Checking the Remaining Amount of Toner and Paper (Paper/Supplies) 7-15

8 Setup and Registration (System Menu) 8-1

System Menu 8-2
Operation Method 8-2
System Menu Settings 8-3
Report 8-5
System/Network 8-7
User/Job Account 8-14
User Property 8-14
Common Settings 8-15
Copy 8-28
Printer 8-29
Send 8-31
FAX 8-32
Document Box 8-32
Edit Destination 8-33
Adjust/Maint. 8-34

9 User Authentication and Accounting (User Login, Job Accounting) 9-1

Overview of User Login Administration 9-2
Managing the Job Account from PC 9-2
Enabling User Login Administration 9-3
Setting User Login Administration 9-5
Authentication Security 9-5
Adding a User (Local User List) 9-6
Changing User Properties 9-8
User Login Administration for Printing 9-11
Managing the Users to Scan Using TWAIN 9-12
Managing the Users to Scan Using WIA 9-13
Managing the Users that Send Faxes from a PC 9-14
Group Authorization Settings 9-15
Guest Authorization Set. 9-16
Obtain NW User Property 9-19
ID Card Settings 9-20
PIN Login Settings 9-21
Using User Login Administration 9-22
Login/Logout 9-22
Overview of Job Accounting 9-23
To Manage the Number of Sheets Used on Jobs Printed from a PC 9-23
Enabling Job Accounting 9-24
Job Accounting Access 9-25
Setting an Account 9-26
Adding an Account 9-26
Restricting the Use of the Machine 9-28
Editing an Account 9-29
Deleting an Account 9-30
Job Accounting for Printing 9-31
Job Accounting for Scan Using TWAIN 9-32

Job Accounting for Scan Using WIA 9-33
Job Accounting for the FAX Transmitted from a Computer 9-34
Configuring Job Accounting 9-35
Default Setting 9-35
Counting the Number of Pages Printed 9-36
Print Accounting Report 9-37
Using Job Accounting 9-38
Login/Logout 9-38
Unknown User Settings 9-39
Unknown ID Job 9-39
Registering Information for a User whose ID is Unknown 9-40

10 Troubleshooting 10-1

Regular Maintenance 10-2
Cleaning 10-2
Cleaning Glass Platen 10-2
Cleaning Slit Grass 10-3
Cleaning the inside of the Machine 10-4
Toner Container Replacement 10-7
Loading Paper 10-10
Using the Maintenance Menu 10-11
Troubleshooting 10-12
Solving Malfunctions 10-12
Machine Operation Trouble 10-12
Printed Image Trouble 10-15
Responding to Messages 10-18
Clearing Paper Jams 10-30
Jam Location Indicators 10-30
Remove any jammed paper in Cassette 1 10-31
Remove any jammed paper in Cassette 2 10-33
Remove any jammed paper in Cassette 3 10-35
Remove any jammed paper in the Multipurpose Tray 10-37
Remove any jammed paper inside of the Machine 10-38
Remove any jammed paper in Rear Cover 10-42
Remove any jammed paper in the Document Processor 10-46

11 Appendix 11-1

Optional Equipment 11-2
Overview of Optional Equipment 11-2
Optional Applications 11-6
Starting Application Use 11-6
Checking Details of Application 11-7
Character Entry Method 11-8
Using the Keys 11-8
Selecting Type of Characters 11-9
Characters That Can be Entered Using the Numeric Keys 11-9
Entering Symbols 11-10
Entering Characters 11-10
Entering Using the Character Selection Screen 11-12
Paper 11-13
Basic Paper Specifications 11-13
Choosing the Appropriate Paper 11-14
Special Paper 11-17
Specifications 11-21
Machine 11-21
Copy Functions 11-22
Printer Functions 11-23
Scanner Functions 11-23

Document Processor 11-24
Paper Feeder 11-24
Glossary 11-25
Index 2-1

Overview

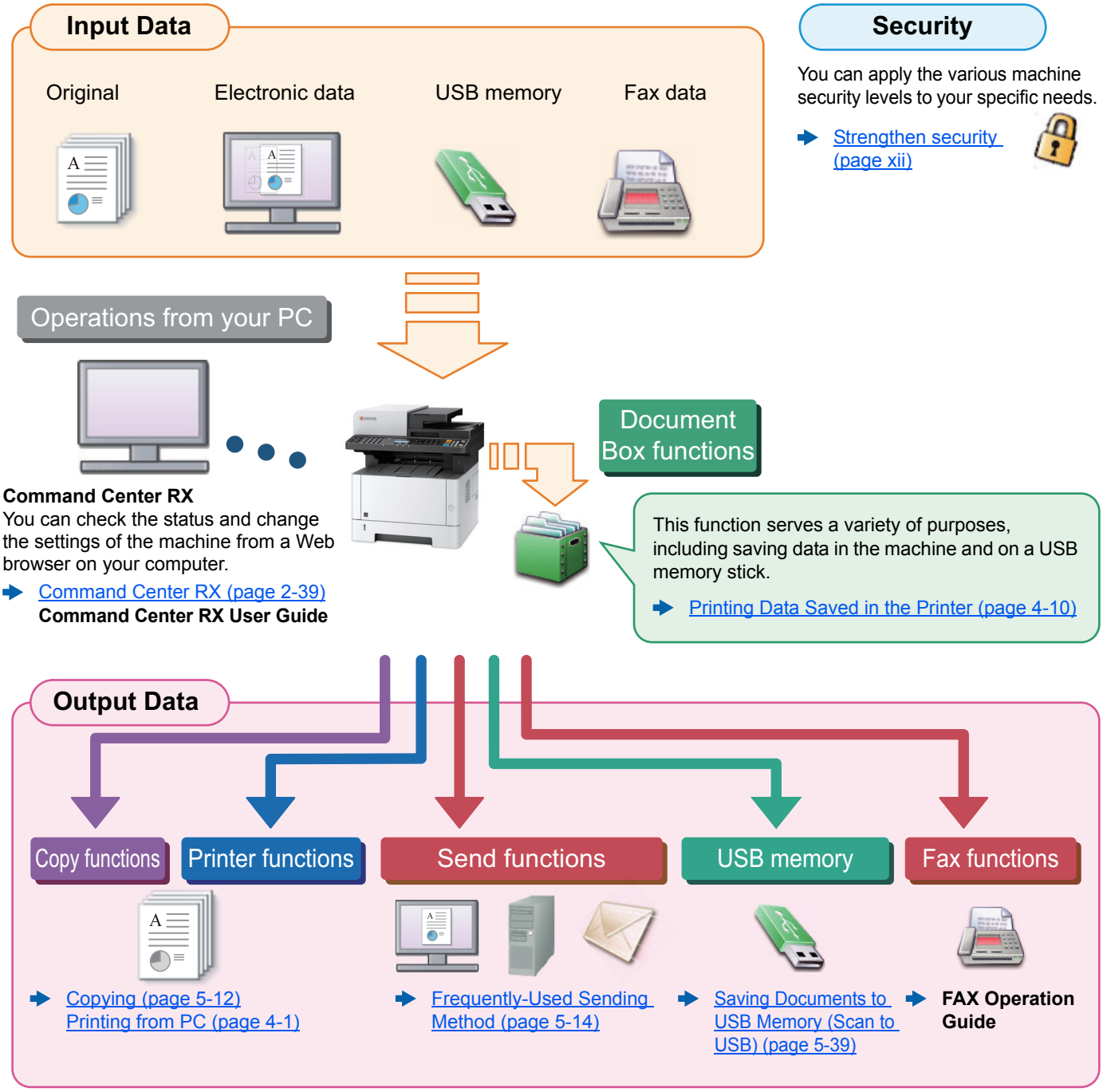

NOTE

- Before using the machine, be sure to read the following:

Legal and Safety Information (page 1-1)

- To prepare the device for use, including setting up cable connections and installing software.

Installing and Setting up the Machine (page 2-1)

- To learn how to load paper, set up shared folders, and add addresses to the address book, refer to the following:

Preparation before Use (page 3-1)

Machine Features

The machine is equipped with many useful functions.

Using Various Functions (page 6-1)

Here are some examples.

Optimize your office workflow

Access to frequently used functions with just one touch (Favorites)

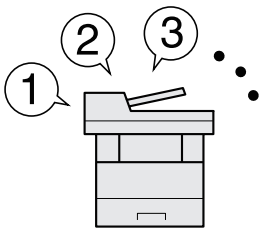

You can preset frequently used functions.

Once you register frequently used settings as favorite, you can call up the settings easily. Using this favorite brings the same results even if operated by another person.

Program (page 5-8)

Copy both sides of an ID card on a single sheet (ID Card Copy)

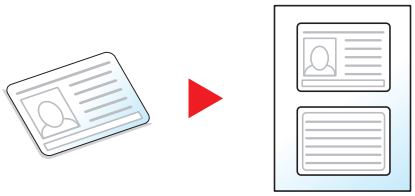

You can copy the front and back sides of an ID card on a single sheet of paper.

Program (page 5-8)

Scan originals of different sizes at a time (Mixed Size Originals)

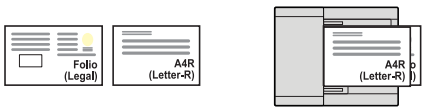

It is useful when preparing conference materials.

You can set the different sized originals at one time so you don't need to reset the originals regardless of size.

Mixed Size Originals (page 6-16)

Optimize your office workflow

Scan a large number of originals in separate batches and produce as one job (Continuous Scan)

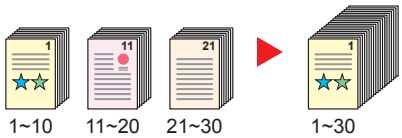

It is useful when preparing many-page handouts.

When a large number of originals cannot be placed in the document processor at one time, the originals can be scanned in separate batches and then copied or sent as one job.

Continuous Scan (page 6-17)

Send one time with multiple sending options (Multi Sending)

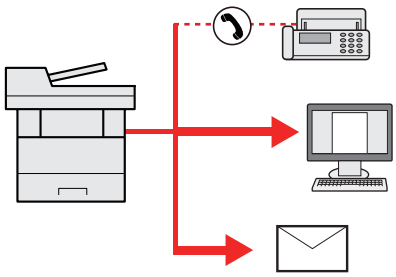

You can send a same document to the multiple destinations using a different method.

You can specify multiple destinations of different send methods such as E-mail, SMB, and Fax.

You can reduce your workflow by sending a job at once.

Sending to Different Types of Destinations (Multi Sending) (page 5-27)

Send a FAX from a PC (Sending FAX from PC)

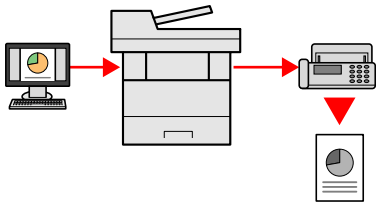

You can save the paper used for sending a FAX with this function.

You can send a file to be faxed from the PC without printing the file, so that you can reduce the number of pieces of paper and perform sending jobs efficiently.

FAX Operation Guide

Save energy and cost

Save energy as needed (Energy Saver function)

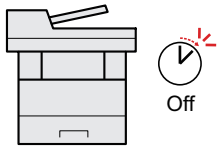

The machine is equipped with Energy Saver function that automatically switched into Sleep Mode. You can set appropriate Energy Saver Recovery Level depending on the operation.

Energy Saver function (page 2-20)

Use less toner for printing (EcoPrint)



You can save toner consumption with this function.

When you only need to check the printed content, such as a trial print run or documents for internal confirmation, use this function to save toner.

Use this function when a high-quality print is not required.

EcoPrint (page 6-17)

Reduce paper use (Paper Saving Printing)

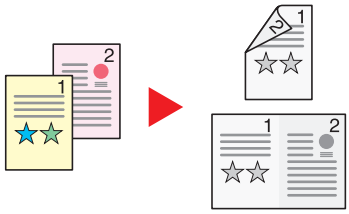

You can print originals on both sides of the paper. You can also print multiple originals onto one sheet.

Combine (page 6-13)
Duplex (page 6-9)

Save energy and cost

Skip blank pages when printing (Skip Blank Page)

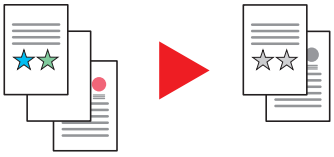

When there are blank pages in a scanned document, this function skips the blank pages and prints only pages that are not blank.

Skip Blank Page (page 6-21)

Send a FAX to reduce the communication cost (FAX Delayed Transmission)

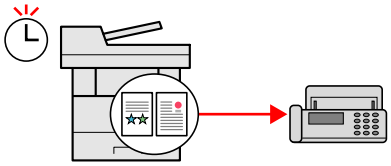

You can reduce the communication cost with this function.

The communication cost can be reduced by setting the timer to the time period during which the communication cost is low.

FAX Operation Guide

Create attractive documents

Scan originals in color and send them to a PC (Scan)

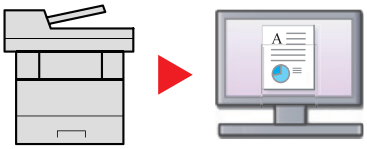

You can scan originals and convert them into electronic data, such as a color PDF.

Frequently-Used Sending Method (page 5-14)

Strengthen security

Password-protect a PDF file (PDF Encryption Functions)

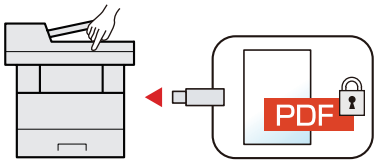

Use the PDF format's password security options to restrict document viewing, printing and editing.

PDF Encryption Functions (page 6-25)

Prevent loss of finished documents (Private Print)

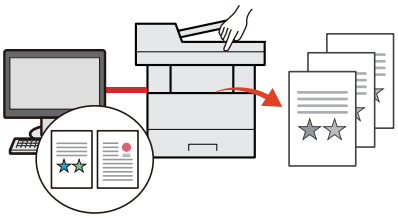

Temporarily saving print jobs in the main unit document box and outputting them when in front of the device can prevent documents from being taken by others.

Printing Data Saved in the Printer (page 4-10)

Log in by ID card (Card Authentication)

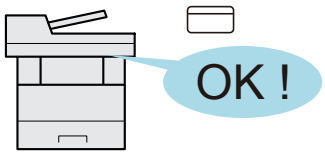

You can log in simply by touching an ID card. You don't need to enter your user name and password.

Card Authentication Kit(B) "Card Authentication Kit" (page 11-4)

Strengthen security

Strengthen security (Settings for Administrator)



Various functions are available for administrators to strengthen security.

Strengthening the Security (page 2-38)

Use functions more efficiently

Make the machine quiet (Quiet Mode)

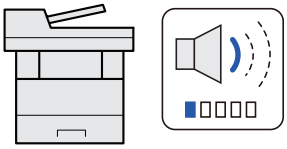

You can make the machine quiet by reducing its running noise.ON/OFF switching by one-touch is possible.

Quiet Mode (page 2-23)

Use USB memory (USB Memory)

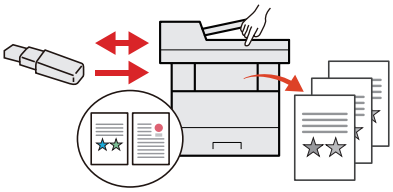

It is useful when you need to print documents outside your office or you cannot print documents from your PC.

You can print the document from the USB memory by plugging it directly into the machine.

Original scanned at the machine can be saved in the USB memory also.

Printing Documents Stored in Removable USB Memory (page 5-37)
Saving Documents to USB Memory (Scan to USB) (page 5-39)

Use functions more efficiently

Specify image file format (File Format)

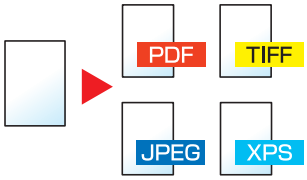

You can select the various file formats when sending/storing images.

File Format (page 6-23)

Perform remote operation (Command Center RX)



You can access to the machine remotely to print, send or download data.

Administrators can configure the machine behavior or management settings.

Command Center RX (page 2-39)

Color and Image Quality Functions

The machine is equipped with various color and image quality functions. You can adjust the scanned image as desired.

Basic Color Modes

The basic color modes are as follows.

Color mode	Description	Reference image		Reference page
		Before	After	
Auto(Color/Gray) **Auto(Color/B&W)**	Automatically recognizes whether a document being scanned is color or black & white.			page 6-19
Full Color	Scans a document in full color.			page 6-19
Grayscale	Scans a document in grayscale.			page 6-19
Black & White	Scans a document in black & white.			page 6-19

For details, refer to the following:

Color Selection (page 6-19)

Adjusting Image Quality and Color

To adjust the image quality or color of an image, use the following functions.

I want to...	Sample image		Function	Page
	Before	After		
Adjust the color precisely.				
Adjust the density.			Density	page 6-17
Adjust the image quality precisely				
Emphasize or blur the image outline. **Example: Emphasize the image outlines**			Sharpness	page 6-19
Adjust the difference between dark and light parts of the image.			Contrast	page 6-20
Darken or lighten the background (the area with no texts or images) of a document. **Example: Lightening the background**			Background Density	page 6-20
Adjust the scanned image				
Decrease the file size and produce the characters clearly.			File format [High Comp. PDF]	page 6-23

Guides Provided with the Machine

The following guides are provided with the machine. Refer to each guide as needed.

The contents of the guides are subject to change without notice for the purpose of improvement of machine performance.

Printed guides

Start using the machine quickly

Quick Guide

Explains how to use basic functions of the machine, how to use convenient features, how to perform routine maintenance, and what to do when problems occur.

For safe use of the machine

Safety Guide

Provides safety and cautionary information for installation environment and use of the machine. Be sure to read this guide before using the machine.

Safety Guide (ECOSYS M2235dn/ECOSYS M2735dn)

Indicates the space required for machine installation, and describes the cautionary labels and other safety information. Be sure to read this guide before using the machine.

Guides (PDF) on the DVD (Product Library)

Use the machine thoughtfully	**Operation Guide (This Guide)** Explains how to load paper and perform copy, print and scan operations, and indicates default settings and other information.
Use the fax functions	**FAX Operation Guide** Explains how to use the fax function.
Use the ID card	**Card Authentication Kit (B) Operation Guide** Explains how to perform authentication using the ID card.
Easily register machine information and configure settings	**Command Center RX User Guide** Explains how to access the machine from a Web browser on your computer to check and change settings.
Print data from a computer	**Printer Driver User Guide** Explains how to install the printer driver and use the printer function.
Directly print a PDF file	**KYOCERA Net Direct Print Operation Guide** Explains how to print PDF files without launching Adobe Acrobat or Reader.
Monitor the machine and printers on the network	**KYOCERA Net Viewer User Guide** Explains how to monitor your network printing system (the machine) with KYOCERA Net Viewer.
Print without using the printer driver	**PRESCRIBE Commands Command Reference** Describes the native printer language (PRESCRIBE commands). **PRESCRIBE Commands Technical Reference** Describes the PRESCRIBE command functions and control for each type of emulation.
Adjust the print or scan position	**Maintenance Menu User Guide** Maintenance Menu provides the explanation on how to configure the print, scan, and other settings.

Install the following versions of Adobe Reader to view the manuals on the DVD.
Version 8.0 or later

About the Operation Guide (this Guide)

Structure of the guide

The Operation Guide contains the following chapters.

Chapter		Contents
1	**Legal and Safety Information**	Provides precautions regarding use of the machine and trademark information.
2	**Installing and Setting up the Machine**	Explains part names, cable connections, installation of the software, login, logout, and other matters related to administration of the machine.
3	**Preparation before Use**	Explains preparations and settings that are required in order to use the machine, such as how to load paper, and create an address book.
4	**Printing from PC**	Explains functions that are available when the machine is used as a printer.
5	**Operation on the Machine**	Explains the basic procedures for using the machine, such as placing originals, making copies, sending documents, and using document boxes.
6	**Using Various Functions**	Explains convenient functions that are available on the machine.
7	**Status/Job Cancel**	Explains how to check the status of a job and the job history, and how to cancel jobs being printed or waiting to print. Also explains how to check paper and toner levels, how to check the device status, and how to cancel fax transmission.
8	**Setup and Registration (System Menu)**	Explains System Menu and how it relates to the operation of the machine.
9	**User Authentication and Accounting (User Login, Job Accounting)**	Explains user login and job accounting.
10	**Troubleshooting**	Explains what to do when toner runs out, an error is displayed, or a paper jam or other problem occurs.
11	**Appendix**	Describes convenient options that are available for the machine. Provides information on media types and paper sizes, and gives a glossary of terms. Explains how to enter characters, and lists the specifications of the machine.

Conventions Used in This Guide

Adobe Reader XI is used as an example in the explanations below.

Click an item in the Table of Contents to jump to the corresponding page.

Click to move from the current page to the previously displayed page. This is convenient when you want to return to the page from which you jumped to the current page.

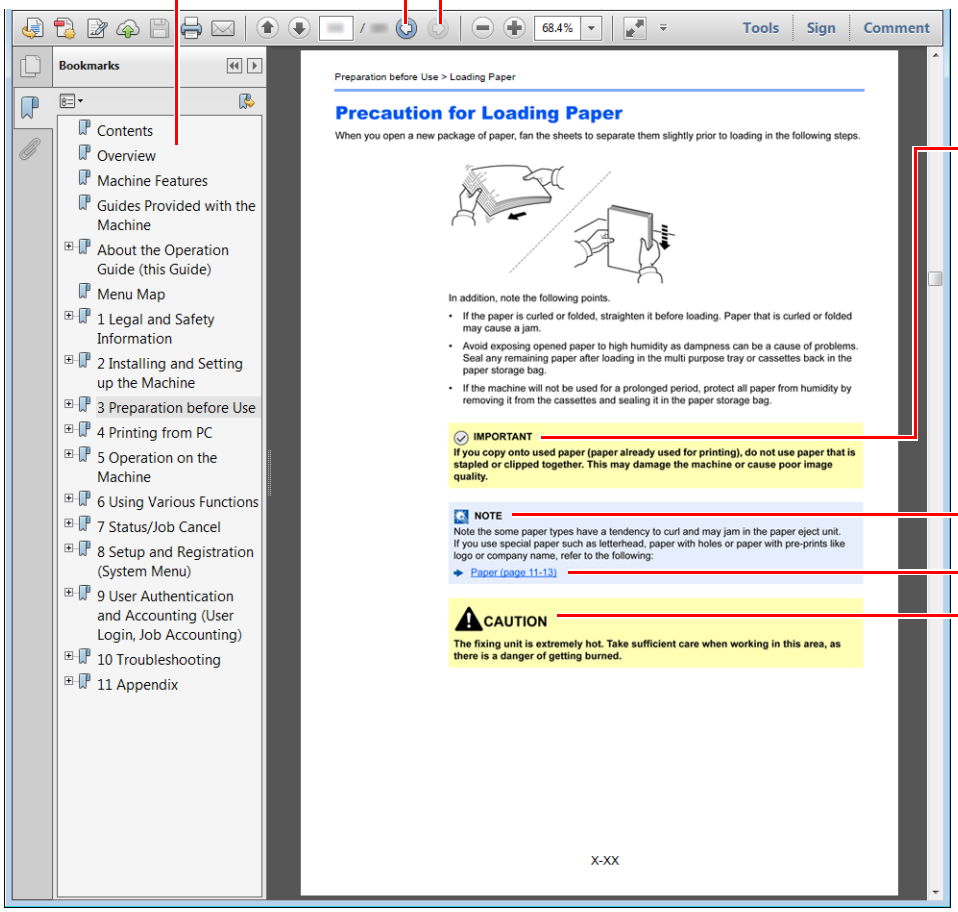

IMPORTANT

Indicates operational requirements and restrictions to operate the machine correctly, and avoid damage to the machine or property.

NOTE

Indicates supplemental explanations and reference information for operations.

Refer to

Click the underlined text to jump to the corresponding page.

CAUTION

Indicates that personal injury or mechanical damage may result from insufficient attention to or incorrect compliance with the related points.

NOTE

The items that appear in Adobe Reader vary depending on how it is used. If the Table of Contents or tools do not appear, refer to Adobe Reader Help.

Certain items are indicated in this guide by the conventions described below.

Convention	Description
[**Bold**]	Indicates keys and buttons.
"Regular"	Indicates a message or setting.

Conventions used in procedures for operating the machine

In this Operation Guide, continuous operation is as follows:

Actual procedure	Procedure indicated in this guide
Select the [**System Menu/Counter**] key. ▼ Select the [▲] or [▼] key to select [**Common settings**]. ▼ Select the [**OK**] key.	[**System Menu/Counter**] key > [▲] [▼] key > [**Common Settings**] > [**OK**] key

Size and Orientation of Paper

Paper sizes such as A5 can be used in both the horizontal and vertical orientations. To distinguish the orientations when these sizes are used, "R" is added to sizes used in the vertical orientation. In addition, the following icons are used to indicate paper placement orientations on the message display.

Orientation		Setting Position (X=Length, Y=Width)	Icons on the message display	Indicated size in this Guide*1
Vertical orientation (-R)	Cassette	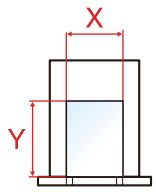		A5-R
	Multipurpose tray	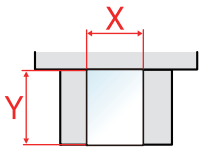		A5-R
Horizontal orientation	Cassette	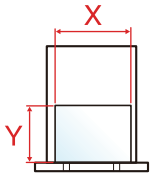		A5
	Multipurpose tray	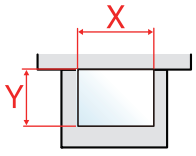		A5

*1 Paper sizes that can be used vary depending on the function and source tray. For details, refer to the following.

Specifications (page 11-21)

Menu Map

This is a list of menus displayed on the message display. Depending on the settings, some menus may not be displayed. Some menu names may differ from their reference titles.



Paper Selection (page 6-8)
Collate (page 6-9)
Duplex (page 6-9)
Zoom (page 6-11)
Combine (page 6-13)
Original Size (page 6-15)
Orig.Orientation (page 6-15)
Mixed Size Orig. (page 6-16)
Original Image (page 6-16)
Density (page 6-17)
EcoPrint (page 6-17)
Continuous Scan (page 6-17)
File Name Entry (page 6-18)
JobFinish Notice (page 6-18)
Print Override (page 6-18)
Sharpness (page 6-19)
Contrast (page 6-20)
Backgrnd Density (page 6-20)
Skip Blank Page (page 6-21)



Me(E-mail) (page 5-28)
E-mail (page 5-15)
Folder(SMB) (page 5-16)
Folder(FTP) (page 5-18)
WSD Scan (page 5-23)
FAX Server (page 5-25)
FAX (Refer to **FAX Operation Guide**.)



Color Selection (page 6-19)
Original Size (page 6-15)
Original Image (page 6-16)
Scan Resolution (page 6-21)
Sending Size (page 6-22)
Zoom (page 6-11)
Orig.Orientation (page 6-15)
Mixed Size Orig. (page 6-16)
Continuous Scan (page 6-17)
File Format (page 6-23)
File Name Entry (page 6-18)
Subject/Body (page 6-27)
JobFinish Notice (page 6-18)
FAX Resolution (Refer to **FAX Operation Guide**.)
FAX Delayed TX (Refer to **FAX Operation Guide**.)
FAX Direct TX (Refer to **FAX Operation Guide**.)
FAX RX Polling (Refer to **FAX Operation Guide**.)
FAX TX Report (Refer to **FAX Operation Guide**.)
Density (page 6-17)
FTP Encrypted TX (page 6-27)
File Separation (page 6-27)
Sharpness (page 6-19)
Contrast (page 6-20)
Backgrnd Density (page 6-20)
Skip Blank Page (page 6-21)

Document Box/USB



Sub Address Box (Refer to FAX Operation Guide.)				
Polling Box (Refer to FAX Operation Guide.)				
Job Box	Private Print (page 4-11)			
	Private/Stored (page 4-11)			
	Proof and Hold (page 4-16)			
	Quick/Proof (page 4-14)			
USB Memory	**Store File**	Function Menu	Color Selection (page 6-19)	
			Original Size (page 6-15)	
			Original Image (page 6-16)	
			Scan Resolution (page 6-21)	
			Storing Size (page 6-28)	
			Zoom (page 6-11)	
			Orig.Orientation (page 6-15)	
			Mixed Size Orig. (page 6-16)	
			Continuous Scan (page 6-17)	
			File Format (page 6-23)	
			File Separation (page 6-27)	
			File Name Entry (page 6-18)	
			JobFinish Notice (page 6-18)	
			Density (page 6-17)	
			Sharpness (page 6-19)	
			Contrast (page 6-20)	
			Backgrnd Density (page 6-20)	
			Skip Blank Page (page 6-21)	
	(File Selection)	**Print**	Function Menu	Collate (page 6-9)
				Paper Selection (page 6-8)
				Duplex (page 6-9)
				EcoPrint (page 6-17)
				File Name Entry (page 6-18)
				JobFinish Notice (page 6-18)
				Print Override (page 6-18)
				Encrypted PDF (page 6-28)
				JPEG/TIFF Print (page 6-29)
				XPS FitTo Page (page 6-29)



Recall program. (page 5-8)

Status/
Job Cancel

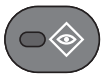

Print Job Status (page 7-4)
Send Job Status (page 7-5)
Store Job Status (page 7-6)
Scheduled Job (page 7-7)
Print Job Log (page 7-10)
Send Job Log (page 7-11)
Store Job Log (page 7-12)
FAX Job Log (Refer to **FAX Operation Guide**.)
Scanner (page 7-14)
Printer (page 7-14)
FAX (Refer to **FAX Operation Guide**.)
Toner Status (page 7-15)
Paper Status (page 7-15)
USB Memory (page 7-14)
USB Keyboard (page 7-14)
Network (page 7-14)

System Menu/
Counter



Report	**Report Print**	Menu Map (page 8-5)
		Status Page (page 8-5)
		Font List (page 8-5)
	Admin Rpt Set. (Refer to **FAX Operation Guide**.)	
	Result Rpt Set. (page 8-6)	
	Job Log History	Auto Sending (page 8-6)
		Send History (page 8-6)
		Destination (page 8-6)
		Subject (page 8-6)
		Personal Info. (page 8-6)
Counter (page 2-37)		
System/Network	**Network Setting**	Wired Netwk. Set (page 8-7)
		Bonjour (page 8-8)
		IPSec (page 8-8)
		ProtocolSettings (page 8-9)
		Secure Settings (page 8-12)
		Ping (page 8-12)
		Restart Network (page 8-12)
	I/F Block Set.	USB Host (page 8-12)
		USB Device (page 8-12)
		USB Storage (page 8-12)
	Security Level (page 8-12)	
	Restart (page 8-13)	
	Op Functions (page 8-13)	
	FAX Server Set. (page 8-14)	

User/Job Account	**User Login Set.**	User Login (page 9-3)	
		Local User List (page 9-6)	
		Account Lockout (page 9-5)	
		ID Card Setting	Key Login (page 9-20)
			Additional Auth. (page 9-20)
		Group Auth. (page 9-15)	
		Guest Auth. Set. (page 9-16)	
		PIN Login (page 9-21)	
		NW User Property (page 9-19)	
	Job Account.Set.	Job Accounting (page 9-24)	
		AccountingAccess (page 9-25)	
		Account. Report (page 9-37)	
		Total Accounting (page 9-36)	
		Each Job Account (page 9-36)	
		Account. List (page 9-26)	
		Default Setting	Apply Limit (page 9-35)
			Copy/Print Count (page 9-35)
			Counter Limit (page 9-35)
	Unknown User	Unknown ID Job (page 9-39)	
		User Property (page 9-40)	
User Property (page 9-10)			
Common Settings	Language (page 8-15)		
	Default Screen (page 8-15)		
	Sound	Buzzer (page 8-15)	
		FAX Speaker (Refer to **FAX Operation Guide**.)	
		FAX Monitor (Refer to **FAX Operation Guide**.)	
	Display Bright. (page 8-15)		

Common Settings	**Orig./Paper Set.**	Custom Orig.Size (page 8-16)	
		Detect Orig.(DP) (page 8-16)	
		Def. Orig. Size (page 8-16)	
		Custom PaperSize (page 8-17)	
		Cassette 1 Set.	Cassette 1 Size (page 8-19)
			Cassette 1 Type (page 8-19)
		Cassette 2 Set.	Cassette 2 Size (page 8-19)
			Cassette 2 Type (page 8-19)
		Cassette 3 Set.	Cassette 3 Size (page 8-19)
			Cassette 3 Type (page 8-19)
		MP Tray Set.	MP Tray Size (page 8-19)
			MP Tray Type (page 8-19)
		Media Type Set. (page 8-17)	
		Media for Auto (page 8-17)	
		Def. PaperSource (page 8-18)	
		SpcialPaper Act. (page 8-18)	
		Paper Setup Msg (page 8-18)	
	Preset Limit (page 8-20)		
	Measurement (page 8-20)		
	Error Handling	DuplexPaperError (page 8-21)	
		PaperMismatchErr (page 8-21)	
	Date Setting	Date/Time (page 8-21)	
		Date Format (page 8-21)	
		Time Zone (page 8-21)	
		Summer Time (page 8-21)	
	Timer Setting	Auto Panel Reset (page 8-22)	
		PanelReset Timer (page 8-22)	
		Sleep Level (models except for Europe) (page 8-22)	
		Sleep Rules (models for Europe) (page 8-22)	
		Sleep Timer (page 8-22)	
		Power Off Rule (models for Europe) (page 8-23)	
		Power Off Timer (models for Europe) (page 8-23)	
		Auto Err. Clear (page 8-23)	
		Err. Clear Timer (page 8-23)	
		Unusable Time (Refer to **FAX Operation Guide**.)	
		Ping Timeout (page 8-23)	

Common Settings	**Function Default**	Color Selection (page 8-24)	
		Scan Resolution (page 8-24)	
		FAX Resolution (Refer to **FAX Operation Guide**.)	
		Orig.Image(Copy) (page 8-24)	
		Orig.Image(Send) (page 8-24)	
		Zoom (page 8-24)	
		Collate (page 8-24)	
		Orig.Orientation (page 8-24)	
		Backgrnd(Copy) (page 8-24)	
		Backgrnd(Send) (page 8-24)	
		EcoPrint (page 8-24)	
		Skip Blank(Copy) (page 8-24)	
		Skip Blank(Send) (page 8-24)	
		File Name Entry (page 8-24)	
		Subject/Body (page 8-24)	
		Con.scan-Copy (page 8-24)	
		Con.scan-FAX (page 8-25)	
		Con.scan-Others (page 8-25)	
		File Format (page 8-25)	
		File Separation (page 8-25)	
		JPEG/TIFF Print (page 8-25)	
		XPS FitTo Page (page 8-25)	
		Detail Setting	2 in 1 Layout (page 8-25)
			4 in 1 Layout (page 8-25)
			Border Line (page 8-25)
			Finish. Binding (page 8-25)
			Image Quality (page 8-25)
			Color TIFF Comp. (page 8-25)
			PDF/A (page 8-25)
			High Comp.PDF (page 8-25)
			Black Lvl(Copy) (page 8-25)
			Black Lvl(Send) (page 8-25)
	Login Operation (page 8-26)		
	RAM Disk Mode (page 8-26)		
	Format SD Card (page 8-26)		

Common Settings	Optional Memory (page 8-26)	
	Disp. Status/Log (page 8-27)	
	USB KeyboardType (page 8-27)	
	Low Toner Alert (page 8-27)	
	Show PowerOffMsg (page 8-27)	
	EnergySaver Set.	Recovery Level (page 8-28)
Copy	Paper Selection (page 8-28)	
	AutoPaperSelect. (page 8-28)	
	Auto % Priority (page 8-28)	
	DP Read Action (page 8-28)	
	Select Key Set. (page 8-28)	
Printer	Emulation Set. (page 8-29)	
	EcoPrint (page 8-29)	
	Override A4/LTR (page 8-29)	
	Duplex (page 8-29)	
	Copies (page 8-29)	
	Orientation (page 8-29)	
	Wide A4 (page 8-29)	
	FormFeed TimeOut (page 8-29)	
	LF Action (page 8-29)	
	CR Action (page 8-29)	
	Job Name (page 8-30)	
	User Name (page 8-30)	
	MP Tray Priority (page 8-30)	
	Paper Feed Mode (page 8-30)	
	Auto Cass. Change (page 8-30)	
	Resolution (page 8-30)	
	KIR (page 8-30)	
Send	Select Key Set. (page 8-31)	
	DestinationCheck (page 8-31)	
	New Dest. Entry (page 8-31)	
	Recall Dest. (page 8-31)	
	Default Screen (page 8-31)	
	Send and Forward (page 8-31)	
FAX (Refer to FAX Operation Guide.)		

Document Box	Sub Address Box (Refer to **FAX Operation Guide**.)	
	Job Box	Quick Copy Jobs (page 8-32)
		JobRet. Deletion (page 8-32)
	Polling Box (Refer to **FAX Operation Guide**.)	
	Select Key Set. (page 8-28)	
Edit Destination	Address Book (page 8-33)	
	Print List (page 8-33)	
	Addr Book Defaults (page 8-33)	
Adjust/Maint.	Copy Denst. Adj. (page 8-34)	
	Send/Box Density (page 8-34)	
	Contrast (Copy) (page 8-34)	
	Contrast (Send) (page 8-34)	
	Backgrnd Density (page 8-34)	
	Print Density (page 8-34)	
	AutoColorCorrect (page 8-34)	
	Correct. Bk Line (page 8-34)	
	Service Setting (page 8-34)	

1 Legal and Safety Information

Please read this information before using your machine. This chapter provides information on the following topics.

Notice 1-2
Safety Conventions in This Guide 1-2
Environment 1-3
Precautions for Use 1-4
Laser Safety (Europe) 1-5
Legal Restriction on Copying/Scanning 1-6
EN ISO 7779 1-6
EK1-ITB 2000 1-6
Legal Information 1-7
Energy Saving Control Function 1-13
Automatic 2-Sided Print Function 1-13
Resource Saving - Paper 1-13
Environmental benefits of "Power Management" 1-13
Energy Star (ENERGY STAR®) Program 1-13

Notice

Safety Conventions in This Guide

The sections of this guide and parts of the machine marked with symbols are safety warnings meant to protect the user, other individuals and surrounding objects, and ensure correct and safe usage of the machine. The symbols and their meanings are indicated below.

WARNING: Indicates that serious injury or even death may result from insufficient attention to or incorrect compliance with the related points.

CAUTION: Indicates that personal injury or mechanical damage may result from insufficient attention to or incorrect compliance with the related points.

Symbols

The △ symbol indicates that the related section includes safety warnings. Specific points of attention are indicated inside the symbol.

... [General warning]

... [Warning of high temperature]

The ⃠ symbol indicates that the related section includes information on prohibited actions. Specifics of the prohibited action are indicated inside the symbol.

... [Warning of prohibited action]

... [Disassembly prohibited]

The ● symbol indicates that the related section includes information on actions which must be performed. Specifics of the required action are indicated inside the symbol.

... [Alert of required action]

... [Remove the power plug from the outlet]

... [Always connect the machine to an outlet with a ground connection]

Please contact your service representative to order a replacement if the safety warnings in this Operation Guide are illegible or if the guide itself is missing (fee required).

NOTE
An original which resembles a bank note closely may not be copied properly in some rare cases because this machine is equipped with a counterfeiting prevention function.

Environment

The service environmental conditions are as follows:

Temperature	50 to 90.5°F (10 to 32.5°C)
Humidity	10 to 80%

Avoid the following locations when selecting a site for the machine.

- Avoid locations near a window or with exposure to direct sunlight.
- Avoid locations with vibrations.
- Avoid locations with drastic temperature fluctuations.
- Avoid locations with direct exposure to hot or cold air.
- Avoid poorly ventilated locations.

If the floor is delicate against casters, when this machine is moved after installation, the floor material may be damaged.

During copying, some ozone is released, but the amount does not cause any ill effect to one's health. If, however, the machine is used over a long period of time in a poorly ventilated room or when making an extremely large number of prints, the smell may become unpleasant. To maintain the appropriate environment for copy work, it is suggested that the room be properly ventilated.

Precautions for Use

Cautions when handling consumables

CAUTION

Do not attempt to incinerate parts which contain toner. Dangerous sparks may cause burns.

Keep parts which contain toner out of the reach of children.

If toner happens to spill from parts which contain toner, avoid inhalation and ingestion, as well as contact with your eyes and skin.

- If you do happen to inhale toner, move to a place with fresh air and gargle thoroughly with a large amount of water. If coughing develops, contact a physician.
- If you do happen to ingest toner, rinse your mouth with water and drink 1 or 2 cups of water to dilute the contents of your stomach. If necessary, contact a physician.
- If you do happen to get toner in your eyes, flush them thoroughly with water. If there is any remaining tenderness, contact a physician.
- If toner does happen to get on your skin, wash with soap and water.

Do not attempt to force open or destroy parts which contain toner.

Other precautions

Return the exhausted toner container to your dealer or service representative. The collected toner container will be recycled or disposed in accordance with the relevant regulations.

Store the machine while avoiding exposure to direct sunlight.

Store the machine in a place where the temperature stays below 40°C while avoiding sharp changes of temperature and humidity.

If the machine will not be used for an extended period of time, remove the paper from the cassette and the Multipurpose (MP) Tray, return it to its original package and reseal it.

Laser Safety (Europe)

Laser radiation could be hazardous to the human body. For this reason, laser radiation emitted inside this machine is hermetically sealed within the protective housing and external cover. In the normal operation of the product by user, no radiation can leak from the machine.

This machine is classified as Class 1 laser product under IEC/EN 60825-1:2014.

Regarding CLASS 1 laser products, information is provided on the rating label.

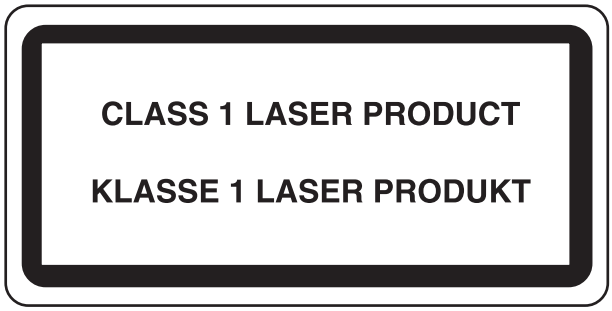

Legal Restriction on Copying/Scanning

It may be prohibited to copy/scan copyrighted material without permission of the copyright owner.

Copying/Scanning the following items is prohibited and may be penalized by low. It may not be limited to these items. Do not knowingly copy/scan the items that are not to be copied/scanned.

- Paper money
- Bank note
- Securities
- Stamp
- Passport
- Certificate

Local laws and regulations may prohibit or restrict copying/scanning of other items not mentioned above.

EN ISO 7779

Maschinenlärminformations-Verordnung 3. GPSGV, 06.01.2004: Der höchste Schalldruckpegel beträgt 70 dB (A) oder weniger gemäß EN ISO 7779.

EK1-ITB 2000

Das Gerät ist nicht für die Benutzung im unmittelbaren Gesichtsfeld am Bildschirmarbeitsplatz vorgesehen. Um störende Reflexionen am Bildschirmarbeitsplatz zu vermeiden, darf dieses Produkt nicht im unmittelbaren Gesichtsfeld platziert werden.

Legal Information

Copying or other reproduction of all or part of this guide without the prior written consent of KYOCERA Document Solutions Inc. is prohibited.

Regarding Trade Names

- PRESCRIBE and ECOSYS are registered trademark of Kyocera Corporation.
- KPDL is a trademark of Kyocera Corporation.
- Microsoft, Windows, Windows Server, Windows Vista and Internet Explorer are registered trademarks or trademarks of Microsoft Corporation in the U.S.A. and/or other countries.
- PCL is a trademark of Hewlett-Packard Company.
- Adobe Acrobat, Adobe Reader and PostScript are trademarks of Adobe Systems Incorporated.
- Ethernet is a registered trademark of Xerox Corporation.
- IBM and IBM PC/AT are trademarks of International Business Machines Corporation.
- AppleTalk, Bonjour, Macintosh, and Mac OS are trademarks of Apple Inc., registered in the U.S. and other countries.
- All European language fonts installed in this machine are used under licensing agreement with Monotype Imaging Inc.
- Helvetica, Palatino and Times are registered trademarks of Linotype GmbH.
- ITC Avant Garde Gothic, ITC Bookman, ITC ZapfChancery and ITC ZapfDingbats are registered trademarks of International Typeface Corporation.
- ThinPrint is a trademark of Cortado AG in Germany and other countries.
- UFST™ MicroType® fonts by Monotype Imaging Inc. are installed in this machine.
- This machine contains the software having modules developed by Independent JPEG Group.
- iPad, iPhone and iPod touch are trademarks of Apple Inc., registered in the U.S. and other countries.
- AirPrint and the AirPrint logo are trademarks of Apple Inc.
- iOS is a trademark or registered trademark of Cisco in the U.S. and other countries and is used under license by Apple Inc.
- Google and Google Cloud Print™ are trademarks and/or registered trademarks of Google Inc.
- Mopria™ is registered trademarks of Mopria™ Alliance.

All other brands and product names are registered trademarks or trademarks of their respective companies. The designations ™ and ® will not be used in this Operation Guide.

GPL/LGPL

This product contains GPL (http://www.gnu.org/licenses/gpl.html) and/or LGPL (http://www.gnu.org/licenses/lgpl.html) software as part of its firmware. You can get the source code, and you are permitted to copy, redistribute and modify it under the terms of GPL/LGPL. For further information including availability of the source code, visit http://www.kyoceradocumentsolutions.com/gpl/.

OpenSSL License

Copyright (c) 1998-2006 The OpenSSL Project. All rights reserved.

Redistribution and use in source and binary forms, with or without modification, are permitted provided that the following conditions are met:

1. Redistributions of source code must retain the above copyright notice, this list of conditions and the following disclaimer.
2. Redistributions in binary form must reproduce the above copyright notice, this list of conditions and the following disclaimer in the documentation and/or other materials provided with the distribution.
3. All advertising materials mentioning features or use of this software must display the following acknowledgment: "This product includes software developed by the OpenSSL Project for use in the OpenSSL Toolkit. (http://www.openssl.org/)"
4. The names "OpenSSL Toolkit" and "OpenSSL Project" must not be used to endorse or promote products derived from this software without prior written permission.
   For written permission, please contact openssl-core@openssl.org.
5. Products derived from this software may not be called "OpenSSL" nor may "OpenSSL" appear in their names without prior written permission of the OpenSSL Project.
6. Redistributions of any form whatsoever must retain the following acknowledgment: "This product includes software developed by the OpenSSL Project for use in the OpenSSL Toolkit (http://www.openssl.org/)"

THIS SOFTWARE IS PROVIDED BY THE OpenSSL PROJECT "AS IS" AND ANY EXPRESSED OR IMPLIED WARRANTIES, INCLUDING, BUT NOT LIMITED TO, THE IMPLIED WARRANTIES OF MERCHANTABILITY AND FITNESS FOR A PARTICULAR PURPOSE ARE DISCLAIMED. IN NO EVENT SHALL THE OpenSSL PROJECT OR ITS CONTRIBUTORS BE LIABLE FOR ANY DIRECT, INDIRECT, INCIDENTAL, SPECIAL, EXEMPLARY, OR CONSEQUENTIAL DAMAGES (INCLUDING, BUT NOT LIMITED TO, PROCUREMENT OF SUBSTITUTE GOODS OR SERVICES; LOSS OF USE, DATA, OR PROFITS; OR BUSINESS INTERRUPTION) HOWEVER CAUSED AND ON ANY THEORY OF LIABILITY, WHETHER IN CONTRACT, STRICT LIABILITY, OR TORT (INCLUDING NEGLIGENCE OR OTHERWISE) ARISING IN ANY WAY OUT OF THE USE OF THIS SOFTWARE, EVEN IF ADVISED OF THE POSSIBILITY OF SUCH DAMAGE.

Original SSLeay License

Copyright (C) 1995-1998 Eric Young (eay@cryptsoft.com) All rights reserved.

This package is an SSL implementation written by Eric Young (eay@cryptsoft.com). The implementation was written so as to conform with Netscapes SSL.

This library is free for commercial and non-commercial use as long as the following conditions are adhered to. The following conditions apply to all code found in this distribution, be it the RC4, RSA, lhash, DES, etc., code; not just the SSL code. The SSL documentation included with this distribution is covered by the same copyright terms except that the holder is Tim Hudson (tjh@cryptsoft.com).

Copyright remains Eric Young's, and as such any Copyright notices in the code are not to be removed.

If this package is used in a product, Eric Young should be given attribution as the author of the parts of the library used.

This can be in the form of a textual message at program startup or in documentation (online or textual) provided with the package.

Redistribution and use in source and binary forms, with or without modification, are permitted provided that the following conditions are met:

1. Redistributions of source code must retain the copyright notice, this list of conditions and the following disclaimer.
2. Redistributions in binary form must reproduce the above copyright notice, this list of conditions and the following disclaimer in the documentation and/or other materials provided with the distribution.
3. All advertising materials mentioning features or use of this software must display the following acknowledgement:
   "This product includes cryptographic software written by Eric Young (eay@cryptsoft.com)"
   The word 'cryptographic' can be left out if the routines from the library being used are not cryptographic related :-).
4. If you include any Windows specific code (or a derivative thereof) from the apps directory (application code) you must include an acknowledgement: "This product includes software written by Tim Hudson (tjh@cryptsoft.com)"

THIS SOFTWARE IS PROVIDED BY ERIC YOUNG "AS IS" AND ANY EXPRESS OR IMPLIED WARRANTIES, INCLUDING, BUT NOT LIMITED TO, THE IMPLIED WARRANTIES OF MERCHANTABILITY AND FITNESS FOR A PARTICULAR PURPOSE ARE DISCLAIMED. IN NO EVENT SHALL THE AUTHOR OR CONTRIBUTORS BE LIABLE FOR ANY DIRECT, INDIRECT, INCIDENTAL, SPECIAL, EXEMPLARY, OR CONSEQUENTIAL DAMAGES (INCLUDING, BUT NOT LIMITED TO, PROCUREMENT OF SUBSTITUTE GOODS OR SERVICES; LOSS OF USE, DATA, OR PROFITS; OR BUSINESS INTERRUPTION) HOWEVER CAUSED AND ON ANY THEORY OF LIABILITY, WHETHER IN CONTRACT, STRICT LIABILITY, OR TORT (INCLUDING NEGLIGENCE OR OTHERWISE) ARISING IN ANY WAY OUT OF THE USE OF THIS SOFTWARE, EVEN IF ADVISED OF THE POSSIBILITY OF SUCH DAMAGE.

The licence and distribution terms for any publically available version or derivative of this code cannot be changed. i.e. this code cannot simply be copied and put under another distribution licence [including the GNU Public Licence.]

Monotype Imaging License Agreement

1 *Software* shall mean the digitally encoded, machine readable, scalable outline data as encoded in a special format as well as the UFST Software.

2 You agree to accept a non-exclusive license to use the Software to reproduce and display weights, styles and versions of letters, numerals, characters and symbols (*Typefaces*) solely for your own customary business or personal purposes at the address stated on the registration card you return to Monotype Imaging. Under the terms of this License Agreement, you have the right to use the Fonts on up to three printers. If you need to have access to the fonts on more than three printers, you need to acquire a multiuser license agreement which can be obtained from Monotype Imaging. Monotype Imaging retains all rights, title and interest to the Software and Typefaces and no rights are granted to you other than a License to use the Software on the terms expressly set forth in this Agreement.

3 To protect proprietary rights of Monotype Imaging, you agree to maintain the Software and other proprietary information concerning the Typefaces in strict confidence and to establish reasonable procedures regulating access to and use of the Software and Typefaces.

4 You agree not to duplicate or copy the Software or Typefaces, except that you may make one backup copy. You agree that any such copy shall contain the same proprietary notices as those appearing on the original.

5 This License shall continue until the last use of the Software and Typefaces, unless sooner terminated. This License may be terminated by Monotype Imaging if you fail to comply with the terms of this License and such failure is not remedied within thirty (30) days after notice from Monotype Imaging. When this License expires or is terminated, you shall either return to Monotype Imaging or destroy all copies of the Software and Typefaces and documentation as requested.

6 You agree that you will not modify, alter, disassemble, decrypt, reverse engineer or decompile the Software.

7 Monotype Imaging warrants that for ninety (90) days after delivery, the Software will perform in accordance with Monotype Imaging-published specifications, and the diskette will be free from defects in material and workmanship. Monotype Imaging does not warrant that the Software is free from all bugs, errors and omissions.

The parties agree that all other warranties, expressed or implied, including warranties of fitness for a particular purpose and merchantability, are excluded.

8 Your exclusive remedy and the sole liability of Monotype Imaging in connection with the Software and Typefaces is repair or replacement of defective parts, upon their return to Monotype Imaging.

In no event will Monotype Imaging be liable for lost profits, lost data, or any other incidental or consequential damages, or any damages caused by abuse or misapplication of the Software and Typefaces.

9 Massachusetts U.S.A. law governs this Agreement.

10 You shall not sublicense, sell, lease, or otherwise transfer the Software and/or Typefaces without the prior written consent of Monotype Imaging.

11 Use, duplication or disclosure by the Government is subject to restrictions as set forth in the Rights in Technical Data and Computer Software clause at FAR 252-227-7013, subdivision (b)(3)(ii) or subparagraph (c)(1)(ii), as appropriate. Further use, duplication or disclosure is subject to restrictions applicable to restricted rights software as set forth in FAR 52.227-19 (c)(2).

12 You acknowledge that you have read this Agreement, understand it, and agree to be bound by its terms and conditions. Neither party shall be bound by any statement or representation not contained in this Agreement. No change in this Agreement is effective unless written and signed by properly authorized representatives of each party. By opening this diskette package, you agree to accept the terms and conditions of this Agreement.

Knopflerfish License

This product includes software developed by the Knopflerfish Project.
http://www.knopflerfish.org

Copyright 2003-2010 The Knopflerfish Project. All rights reserved.

Redistribution and use in source and binary forms, with or without modification, are permitted provided that the following conditions are met:

- Redistributions of source code must retain the above copyright notice, this list of conditions and the following disclaimer.
- Redistributions in binary form must reproduce the above copyright notice, this list of conditions and the following disclaimer in the documentation and/or other materials provided with the distribution.
- Neither the name of the KNOPFLERFISH project nor the names of its contributors may be used to endorse or promote products derived from this software without specific prior written permission.

THIS SOFTWARE IS PROVIDED BY THE COPYRIGHT HOLDERS AND CONTRIBUTORS "AS IS" AND ANY EXPRESS OR IMPLIED WARRANTIES, INCLUDING, BUT NOT LIMITED TO, THE IMPLIED WARRANTIES OF MERCHANTABILITY AND FITNESS FOR A PARTICULAR PURPOSE ARE DISCLAIMED. IN NO EVENT SHALL THE COPYRIGHT OWNER OR CONTRIBUTORS BE LIABLE FOR ANY DIRECT, INDIRECT, INCIDENTAL, SPECIAL, EXEMPLARY, OR CONSEQUENTIAL DAMAGES (INCLUDING, BUT NOT LIMITED TO, PROCUREMENT OF SUBSTITUTE GOODS OR SERVICES; LOSS OF USE, DATA, OR PROFITS; OR BUSINESS INTERRUPTION) HOWEVER CAUSED AND ON ANY THEORY OF LIABILITY, WHETHER IN CONTRACT, STRICT LIABILITY, OR TORT (INCLUDING NEGLIGENCE OR OTHERWISE) ARISING IN ANY WAY OUT OF THE USE OF THIS SOFTWARE, EVEN IF ADVISED OF THE POSSIBILITY OF SUCH DAMAGE.

Apache License (Version 2.0)

Apache License
Version 2.0, January 2004
http://www.apache.org/licenses/

TERMS AND CONDITIONS FOR USE, REPRODUCTION, AND DISTRIBUTION

1. Definitions.

   "License" shall mean the terms and conditions for use, reproduction, and distribution as defined by Sections 1 through 9 of this document.

   "Licensor" shall mean the copyright owner or entity authorized by the copyright owner that is granting the License.

   "Legal Entity" shall mean the union of the acting entity and all other entities that control, are controlled by, or are under common control with that entity. For the purposes of this definition, "control" means (i) the power, direct or indirect, to cause the direction or management of such entity, whether by contract or otherwise, or (ii) ownership of fifty percent (50%) or more of the outstanding shares, or (iii) beneficial ownership of such entity.

   "You" (or "Your") shall mean an individual or Legal Entity exercising permissions granted by this License.

   "Source" form shall mean the preferred form for making modifications, including but not limited to software source code, documentation source, and configuration files.

"Object" form shall mean any form resulting from mechanical transformation or translation of a Source form, including but not limited to compiled object code, generated documentation, and conversions to other media types.

"Work" shall mean the work of authorship, whether in Source or Object form, made available under the License, as indicated by a copyright notice that is included in or attached to the work (an example is provided in the Appendix below).

"Derivative Works" shall mean any work, whether in Source or Object form, that is based on (or derived from) the Work and for which the editorial revisions, annotations, elaborations, or other modifications represent, as a whole, an original work of authorship. For the purposes of this License, Derivative Works shall not include works that remain separable from, or merely link (or bind by name) to the interfaces of, the Work and Derivative Works thereof.

"Contribution" shall mean any work of authorship, including the original version of the Work and any modifications or additions to that Work or Derivative Works thereof, that is intentionally submitted to Licensor for inclusion in the Work by the copyright owner or by an individual or Legal Entity authorized to submit on behalf of the copyright owner. For the purposes of this definition, "submitted" means any form of electronic, verbal, or written communication sent to the Licensor or its representatives, including but not limited to communication on electronic mailing lists, source code control systems, and issue tracking systems that are managed by, or on behalf of, the Licensor for the purpose of discussing and improving the Work, but excluding communication that is conspicuously marked or otherwise designated in writing by the copyright owner as "Not a Contribution."

"Contributor" shall mean Licensor and any individual or Legal Entity on behalf of whom a Contribution has been received by Licensor and subsequently incorporated within the Work.

2. Grant of Copyright License. Subject to the terms and conditions of this License, each Contributor hereby grants to You a perpetual, worldwide, non-exclusive, no-charge, royalty-free, irrevocable copyright license to reproduce, prepare Derivative Works of, publicly display, publicly perform, sublicense, and distribute the Work and such Derivative Works in Source or Object form.
3. Grant of Patent License. Subject to the terms and conditions of this License, each Contributor hereby grants to You a perpetual, worldwide, non-exclusive, no-charge, royalty-free, irrevocable (except as stated in this section) patent license to make, have made, use, offer to sell, sell, import, and otherwise transfer the Work, where such license applies only to those patent claims licensable by such Contributor that are necessarily infringed by their Contribution(s) alone or by combination of their Contribution(s) with the Work to which such Contribution(s) was submitted. If You institute patent litigation against any entity (including a cross-claim or counterclaim in a lawsuit) alleging that the Work or a Contribution incorporated within the Work constitutes direct or contributory patent infringement, then any patent licenses granted to You under this License for that Work shall terminate as of the date such litigation is filed.
4. Redistribution. You may reproduce and distribute copies of the Work or Derivative Works thereof in any medium, with or without modifications, and in Source or Object form, provided that You meet the following conditions:

   (a)You must give any other recipients of the Work or Derivative Works a copy of this License; and

   (b)You must cause any modified files to carry prominent notices stating that You changed the files; and

   (c)You must retain, in the Source form of any Derivative Works that You distribute, all copyright, patent, trademark, and attribution notices from the Source form of the Work, excluding those notices that do not pertain to any part of the Derivative Works; and

   (d)If the Work includes a "NOTICE" text file as part of its distribution, then any Derivative Works that You distribute must include a readable copy of the attribution notices contained within such NOTICE file, excluding those notices that do not pertain to any part of the Derivative Works, in at least one of the following places: within a NOTICE text file distributed as part of the Derivative Works; within the Source form or documentation, if provided along with the Derivative Works; or, within a display generated by the Derivative Works, if and wherever such third-party notices normally appear. The contents of the NOTICE file are for informational purposes only and do not modify the License. You may add Your own attribution notices within Derivative Works that You distribute, alongside or as an addendum to the NOTICE text from the Work, provided that such additional attribution notices cannot be construed as modifying the License.

   You may add Your own copyright statement to Your modifications and may provide additional or different license terms and conditions for use, reproduction, or distribution of Your modifications, or for any such Derivative Works as a whole, provided Your use, reproduction, and distribution of the Work otherwise complies with the conditions stated in this License.

5. Submission of Contributions. Unless You explicitly state otherwise, any Contribution intentionally submitted for inclusion in the Work by You to the Licensor shall be under the terms and conditions of this License, without any additional terms or conditions. Notwithstanding the above, nothing herein shall supersede or modify the terms of any separate license agreement you may have executed with Licensor regarding such Contributions.
6. Trademarks. This License does not grant permission to use the trade names, trademarks, service marks, or product names of the Licensor, except as required for reasonable and customary use in describing the origin of the Work and reproducing the content of the NOTICE file.
7. Disclaimer of Warranty. Unless required by applicable law or agreed to in writing, Licensor provides the Work (and each Contributor provides its Contributions) on an "AS IS" BASIS, WITHOUT WARRANTIES OR CONDITIONS OF ANY KIND, either express or implied, including, without limitation, any warranties or conditions of TITLE, NON-INFRINGEMENT, MERCHANTABILITY, or FITNESS FOR A PARTICULAR PURPOSE. You are solely responsible for determining the appropriateness of using or redistributing the Work and assume any risks associated with Your exercise of permissions under this License.
8. Limitation of Liability. In no event and under no legal theory, whether in tort (including negligence), contract, or otherwise, unless required by applicable law (such as deliberate and grossly negligent acts) or agreed to in writing, shall any Contributor be liable to You for damages, including any direct, indirect, special, incidental, or consequential damages of any character arising as a result of this License or out of the use or inability to use the Work (including but not limited to damages for loss of goodwill, work stoppage, computer failure or malfunction, or any and all other commercial damages or losses), even if such Contributor has been advised of the possibility of such damages.
9. Accepting Warranty or Additional Liability. While redistributing the Work or Derivative Works thereof, You may choose to offer, and charge a fee for, acceptance of support, warranty, indemnity, or other liability obligations and/or rights consistent with this License. However, in accepting such obligations, You may act only on Your own behalf and on Your sole responsibility, not on behalf of any other Contributor, and only if You agree to indemnify, defend, and hold each Contributor harmless for any liability incurred by, or claims asserted against, such Contributor by reason of your accepting any such warranty or additional liability.

END OF TERMS AND CONDITIONS

APPENDIX: How to apply the Apache License to your work.

To apply the Apache License to your work, attach the following boilerplate notice, with the fields enclosed by brackets "[]" replaced with your own identifying information. (Don't include the brackets!) The text should be enclosed in the appropriate comment syntax for the file format. We also recommend that a file or class name and description of purpose be included on the same "printed page" as the copyright notice for easier identification within third-party archives.

Copyright [yyyy] [name of copyright owner]

Licensed under the Apache License, Version 2.0 (the "License"); you may not use this file except in compliance with the License. You may obtain a copy of the License at

http://www.apache.org/licenses/LICENSE-2.0

Unless required by applicable law or agreed to in writing, software distributed under the License is distributed on an "AS IS" BASIS, WITHOUT WARRANTIES OR CONDITIONS OF ANY KIND, either express or implied. See the License for the specific language governing permissions and limitations under the License.

Energy Saving Control Function

The device comes equipped with a Sleep where printer and fax functions remain in a waiting state but power consumption is reduced to a minimum after a certain amount of time elapses since the device was last used. If the machine is not used while in sleep mode, the power automatically turns off.

Sleep (page 2-20)

Power Off Rule (models for Europe) (page 2-22)

Automatic 2-Sided Print Function

This device includes 2-sided printing as a standard function. For example, by printing two 1-sided originals onto a single sheet of paper as a 2-sided print, it is possible to lower the amount of paper used.

Duplex (page 6-9)

Printing in duplex mode reduces paper consumption and contributes to the conservation of forest resources. Duplex mode also reduces the amount of paper that must be purchased, and thereby reduces cost. It is recommended that machines capable of duplex printing be set to use duplex mode by default.

Resource Saving - Paper

For the preservation and sustainable use of forest resources, it is recommended that recycled as well as virgin paper certified under environmental stewardship initiatives or carrying recognised ecolabels, which meet EN 12281:2002* or an equivalent quality standard, be used.

This machine also supports printing on 64 g/m^2 paper. Using such paper containing less raw materials can lead to further saving of forest resources.

* : EN12281:2002 "Printing and business paper - Requirements for copy paper for dry toner imaging processes"

Your sales or service representative can provide information about recommended paper types.

Environmental benefits of "Power Management"

To reduce power consumption when idle, this machine is equipped with a power management function that automatically activates energy-saving mode when the machine is idle for a certain period of time.
Although it takes the machine a slight amount of time to return to READY mode when in energy-saving mode, a significant reduction in energy consumption is possible. It is recommended that the machine be used with the activation time for energy-saving mode set to the default setting.

Energy Star (ENERGY STAR®) Program

We have determined as a participating company in the International Energy Star Program that this product is compliant with the standards laid out in the International Energy Star Program.

ENERGY STAR® is a voluntary energy efficiency program with the goal of developing and promoting the use of products with high energy efficiency in order to help prevent global warming. By purchasing ENERGY STAR® qualified products, customers can help reduce emissions of greenhouse gases during product use and cut energy-related costs.

2 Installing and Setting up the Machine

This chapter provides information for the administrator of this machine, such as part names, cable connection, and software installation.

Part Names (Machine Exterior) 2-2
Part Names (Connectors/Interior) 2-4
Part Names (With Optional Equipments Attached) 2-6
Connecting the Machine and Other Devices 2-7
Connecting Cables 2-8
- Connecting LAN Cable 2-8
- Connecting USB Cable 2-9
- Connecting the Power Cable 2-9

Power On/Off 2-10
- Power On 2-10
- Power Off 2-10

Using the Operation Panel 2-11
- Operation Panel Keys 2-11
- Operation Method 2-13
- Check the original and paper settings 2-14
- Help Screen 2-14

Login/Logout 2-15
- Login 2-15
- Logout 2-16

Default Settings of the Machine 2-17
- Setting Date and Time 2-17

Network Setup 2-18
- Configuring the Wired Network 2-18

Energy Saver function 2-20
- Sleep 2-20
- Auto Sleep 2-21
- Sleep Rules (models for Europe) 2-21
- Sleep Level (Energy Saver and Quick Recovery) (models except for Europe) 2-22
- Power Off Rule (models for Europe) 2-22

Quiet Mode 2-23

Installing Software 2-24
- Software on DVD (Windows) 2-24
- Installing Software in Windows 2-25
- Uninstalling the Software 2-31
- Installing Software in Mac Computer 2-32
- Setting TWAIN Driver 2-34
- Setting WIA Driver 2-36

Checking the Counter 2-37
Additional Preparations for the Administrator 2-38
- Sending Documents to a PC 2-38
- Strengthening the Security 2-38

Command Center RX 2-39
- Accessing Command Center RX 2-40
- Changing Security Settings 2-41
- Changing Device Information 2-43
- E-mail Settings 2-45
- Registering Destinations 2-49

Transferring Data from Our Other Products 2-50
- Migrating the Address Book 2-50

Part Names (Machine Exterior)

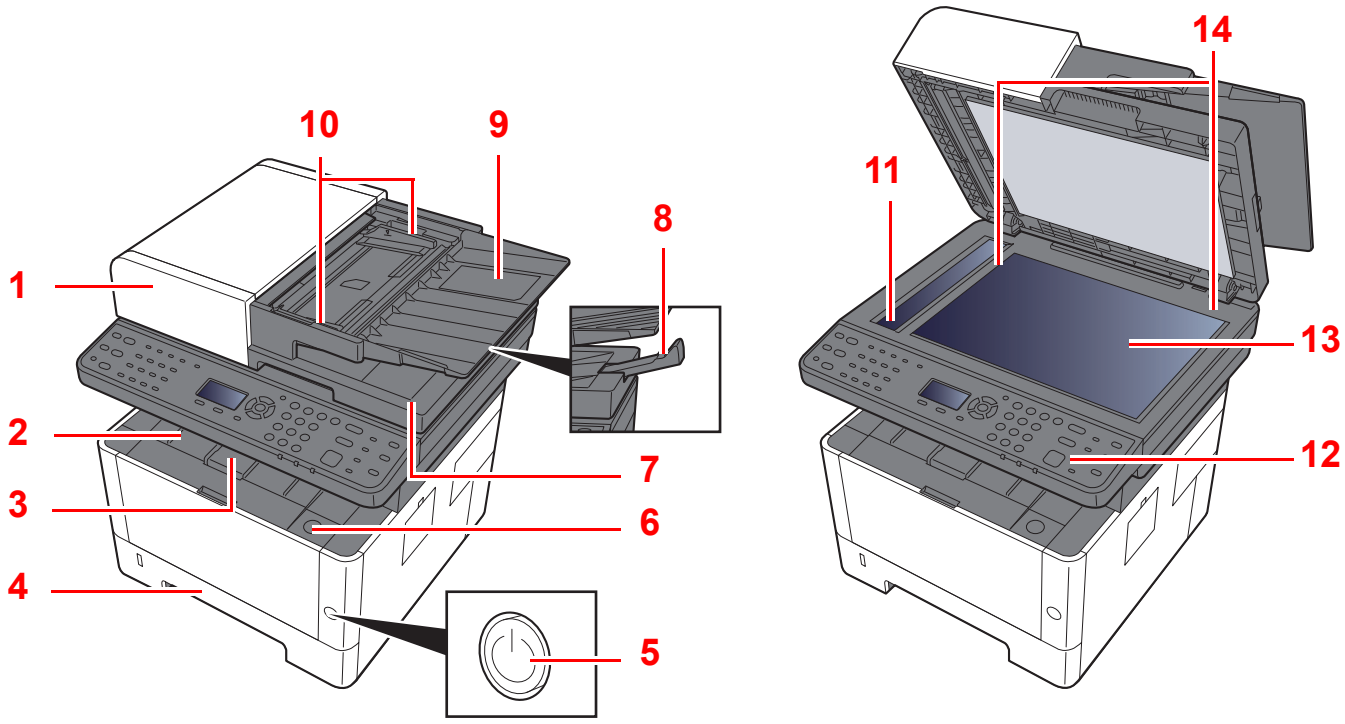

1 Document Processor
2 Inner Tray
3 Paper Stopper
4 Cassette 1
5 Power Switch
6 Front Cover Open Button
7 Original Eject Table
8 Original Stopper
9 Original Table
10 Original Width Guides
11 Slit Glass
12 Operation Panel
13 Platen
14 Original Size Indicator Plates

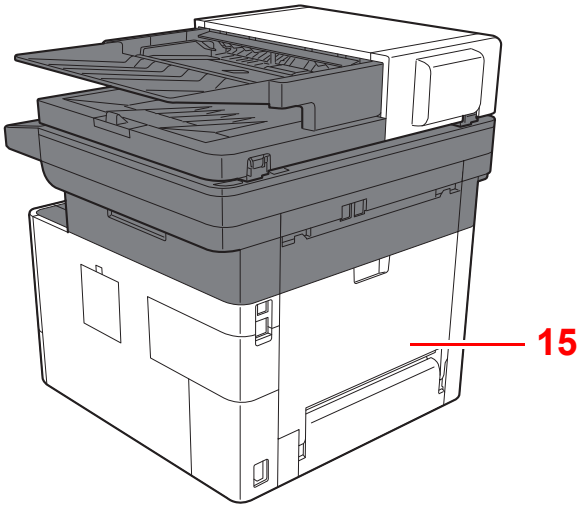

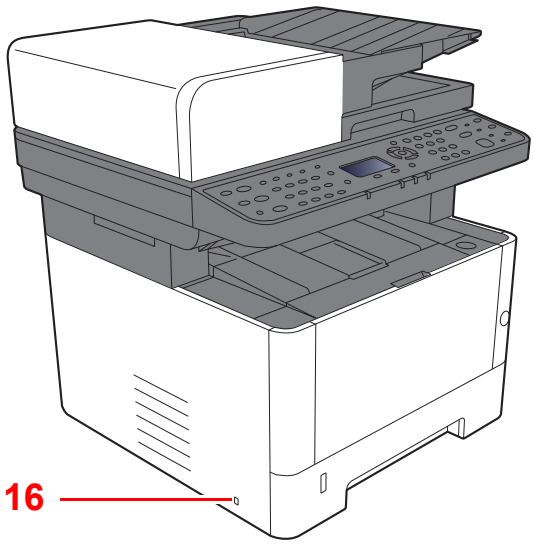

15 Rear Cover

16 Anti-theft Lock Slot

Part Names (Connectors/Interior)

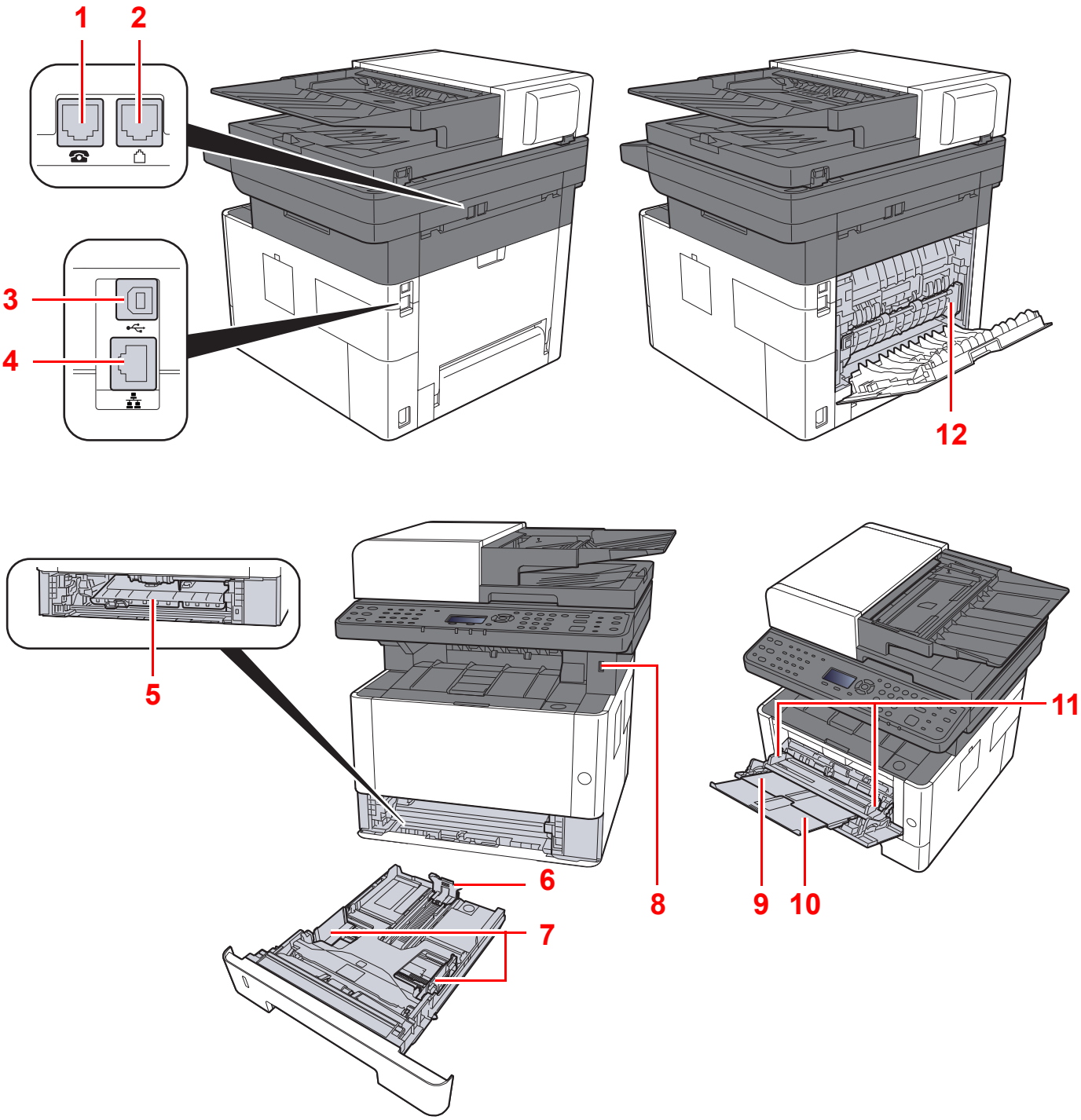

1 TEL Connector
2 LINE Connector
3 USB Interface Connector
4 Network Interface Connector
5 Feed Cover
6 Paper Length Guide
7 Paper Width Guides
8 USB Memory Slot
9 Multipurpose Tray
10 Tray Extension
11 Paper Width Guides
12 Fuser Cover

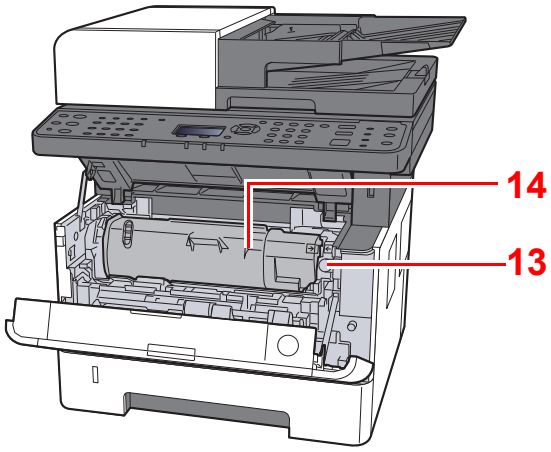

13 Toner Container Release Button

14 Toner Container

Part Names (With Optional Equipments Attached)

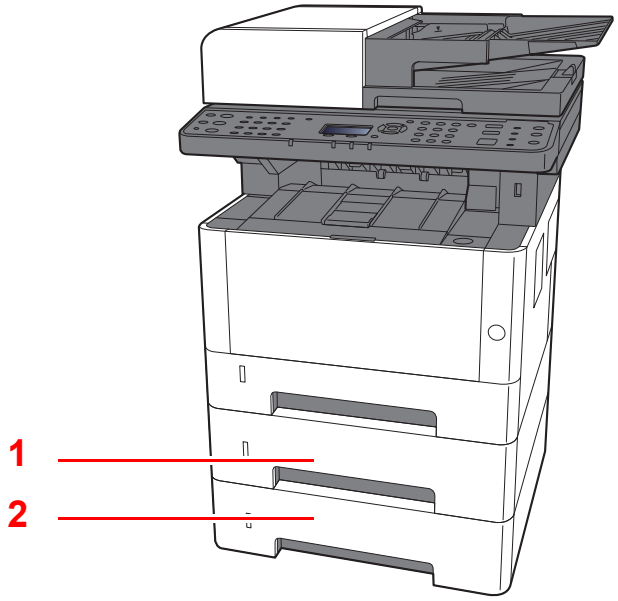

1 Cassette 2

2 Cassette 3

Optional Equipment (page 11-2)

Connecting the Machine and Other Devices

Prepare the cables necessary to suit the environment and purpose of the machine use.

When Connecting the Machine to the PC via USB

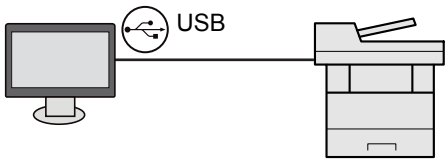

When Connecting the Machine to the PC by network cable

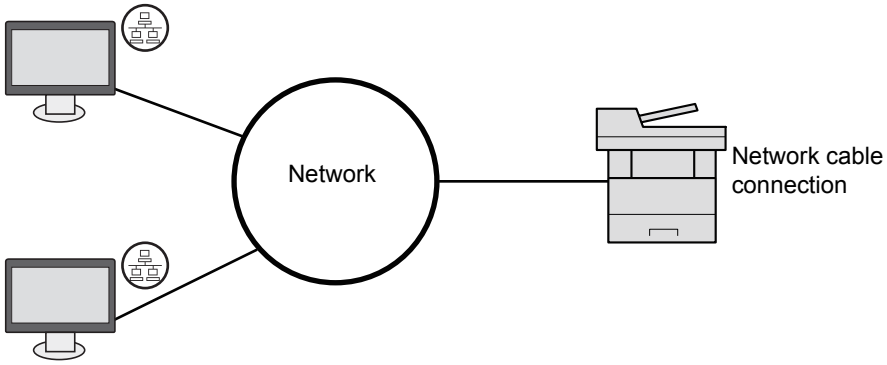

Cables that Can Be Used

Connection Environment	Function	Necessary Cable
Connect a LAN cable to the machine.	Printer/Scanner/Network FAX*1	LAN cable (10BASE-T, 100BASE-TX, 1000BASE-T)
Connect a USB cable to the machine.	Printer/Scanner (TWAIN/WIA)	USB 2.0 compatible cable (Hi-Speed USB compliant, max. 5.0 m, shielded)

*1 Only on products with the fax function installed.

IMPORTANT

Using a cable other than a USB 2.0 compatible cable may cause failure.

Connecting Cables

Connecting LAN Cable

IMPORTANT

Make sure that the power to the machine is turned off.

Power Off (page 2-10)

1 Connect the cable to the machine.

1 Connect the LAN cable to the network interface connector.

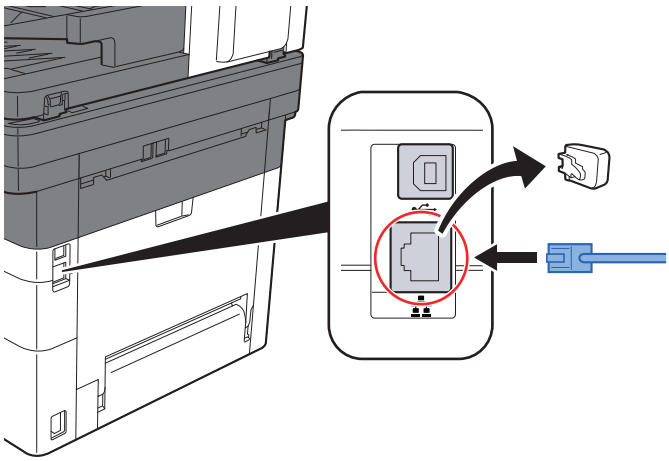

2 Connect the other end of the cable to the hub or the PC.

2 Power on the machine and configure the network.

Network Setup (page 2-18)

Connecting USB Cable

IMPORTANT

Make sure that the power to the machine is turned off.

Power Off (page 2-10)

1 Connect the cable to the machine.

1 Connect the USB cable to the USB interface connector.

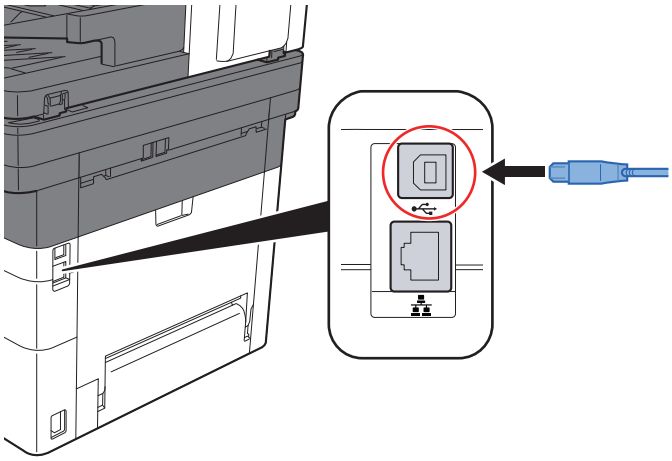

2 Connect the other end of the cable to the PC.

2 Power on the machine.

Connecting the Power Cable

1 Connect the cable to the machine.

Connect one end of the supplied power cable to the machine and the other end to a power outlet.

IMPORTANT

Only use the power cable that comes with the machine.

Power On/Off

Power On

1 **Turn the power switch on.**

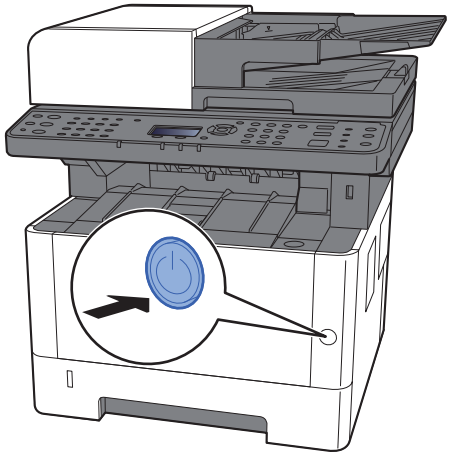

Power Off

1 **Turn the power switch off.**

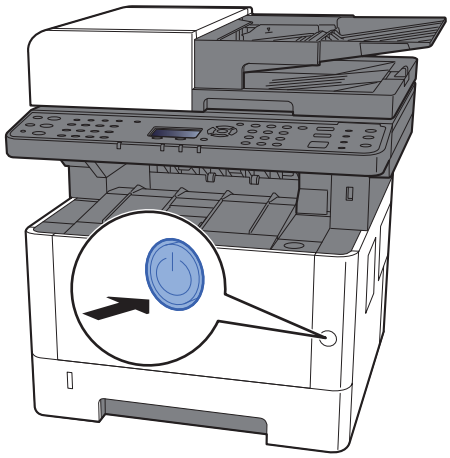

The confirmation message for power supply off is displayed.

Show PowerOffMsg (page 8-27)

It takes about 3 minutes for power off.

CAUTION

If this machine will be left unused for an extended period (e.g. overnight), turn it off at the power switch. If the machine will not be used for an even longer period of time (e.g. vacation), remove the power plug from the outlet as a safety precaution.

IMPORTANT

- **If using the products equipped with the fax function, note that turning the machine off at the power switch disables fax transmission and reception.**
- **Remove paper from the cassettes and seal it in the paper storage bag to protect it from humidity.**

Using the Operation Panel

Operation Panel Keys

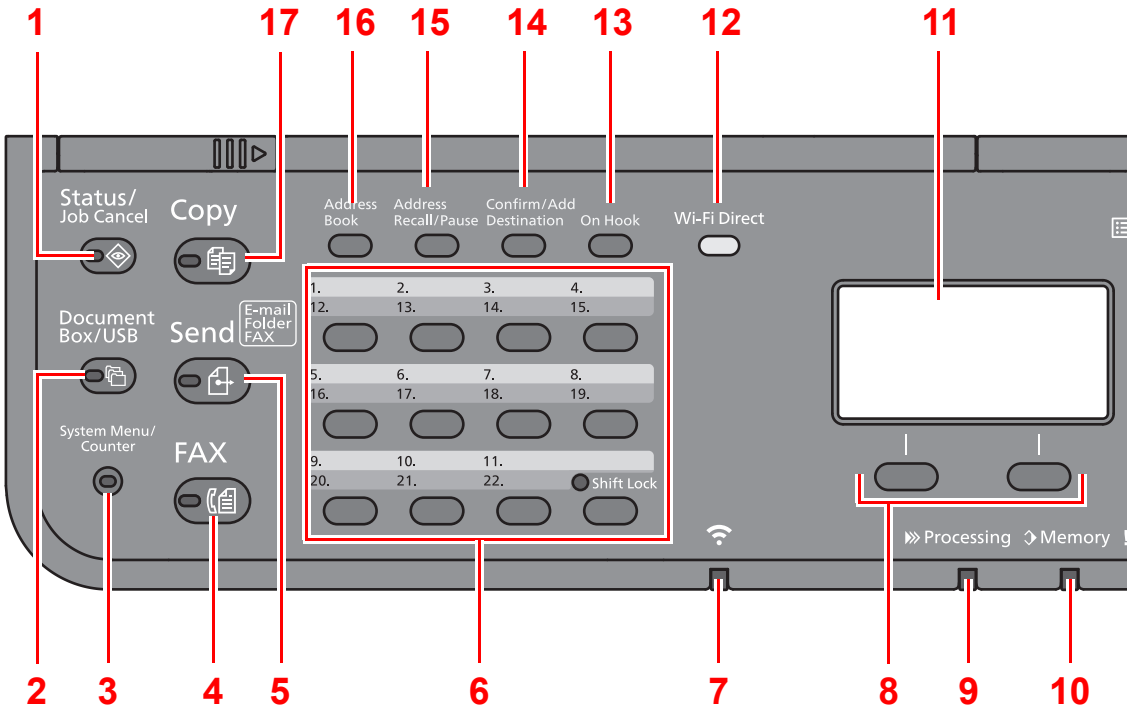

1 [**Status/Job Cancel**] key: Displays the Status/Job Cancel screen.

2 [**Document Box/USB**] key: Displays the Document Box/USB screen.

3 [**System Menu/Counter**] key: Displays the System Menu/Counter screen.

4 [**FAX**] key*1: Displays the FAX screen.

5 [**Send**] key: Displays the screen for sending. You can change it to display the Address Book screen.

6 One Touch keys: Recalls the destination registered for One Touch Keys.

7 [**Wi-Fi**] indicator*2: Blinks during Wi-Fi connection.

8 Select keys: Selects the menu displayed at the bottom of the message display.

9 [**Processing**] indicator: Blinks while printing or sending/receiving.

10 [**Memory**] indicator: Blinks while the machine is accessing the machine memory or fax memory.

11 Message display: Displays the setting menu, machine status, and error messages.

12 [**Wi-Fi Direct**] key*2: Set Wi-Fi Direct, and show information necessary for connection and the connection status.

13 [**On Hook**] key*1: Switches between on-hook and off-hook when manually sending a FAX.

14 [**Confirm/Add Destination**] key: Confirms the destination or adds a destination.

15 [**Address Recall/Pause**] key*3: Calls the previous destination. Also used to enter a pause when entering a FAX number.

16 [**Address Book**] key: Displays the Address Book screen.

17 [**Copy**] key: Displays the Copy screen.

*1 Only on products with the fax function installed.
*2 Please note that the Wi-Fi and Wi-Fi Direct listed in this manual can not be used with this machine.
*3 The products without the fax function have the [**Address Recall**] key instead of the [**Address Recall/Pause**] key.

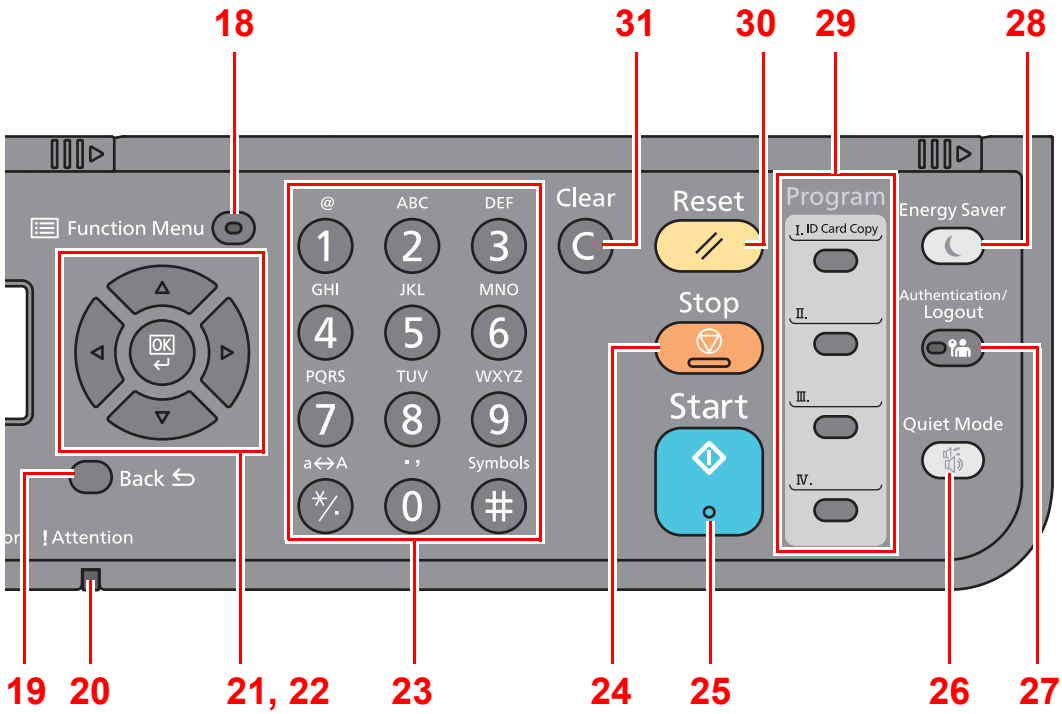

18 [**Function Menu**] key: Displays the function menu screen.

19 [**Back**] key: Returns to the previous display.

20 [**Attention**] indicator: Lights or blinks when an error occurs and a job is stopped.

21 Arrow keys: Increments or decrements numbers, or selects menu in the message display. In addition, moves the cursor when entering the characters.

22 [**OK**] key: Finalizes a function or menu, and numbers that have been entered.

23 Numeric keys: Enter numbers and symbols.

24 [**Stop**] key: Cancels or pauses the job in progress.

25 [**Start**] key: Starts copying and scanning operations and processing for setting operations.

26 [**Quiet Mode**] key: Lower print speed for quiet processing.

27 [**Authentication/Logout**] key: Authenticates user, and exits the operation for the current user (i.e. log out).

28 [**Energy Saver**] key: Puts the machine into Sleep Mode. Recovers from Sleep if in Sleep Mode.

29 Program keys: Used to register or recall programs.

30 [**Reset**] key: Returns settings to their default states.

31 [**Clear**] key: Clears entered numbers and characters.

Operation Method

This section explains how to operate the setting menus on the message display.

Displaying the Menus and Configuring Settings

Select the [**System Menu/Counter**] key or [**Function Menu**] key to display the setting menus. Select the [▲] key, [▼] key, [◄] key, [►] key, [**OK**] key, or [**Back**] key to select a menu, and perform settings.

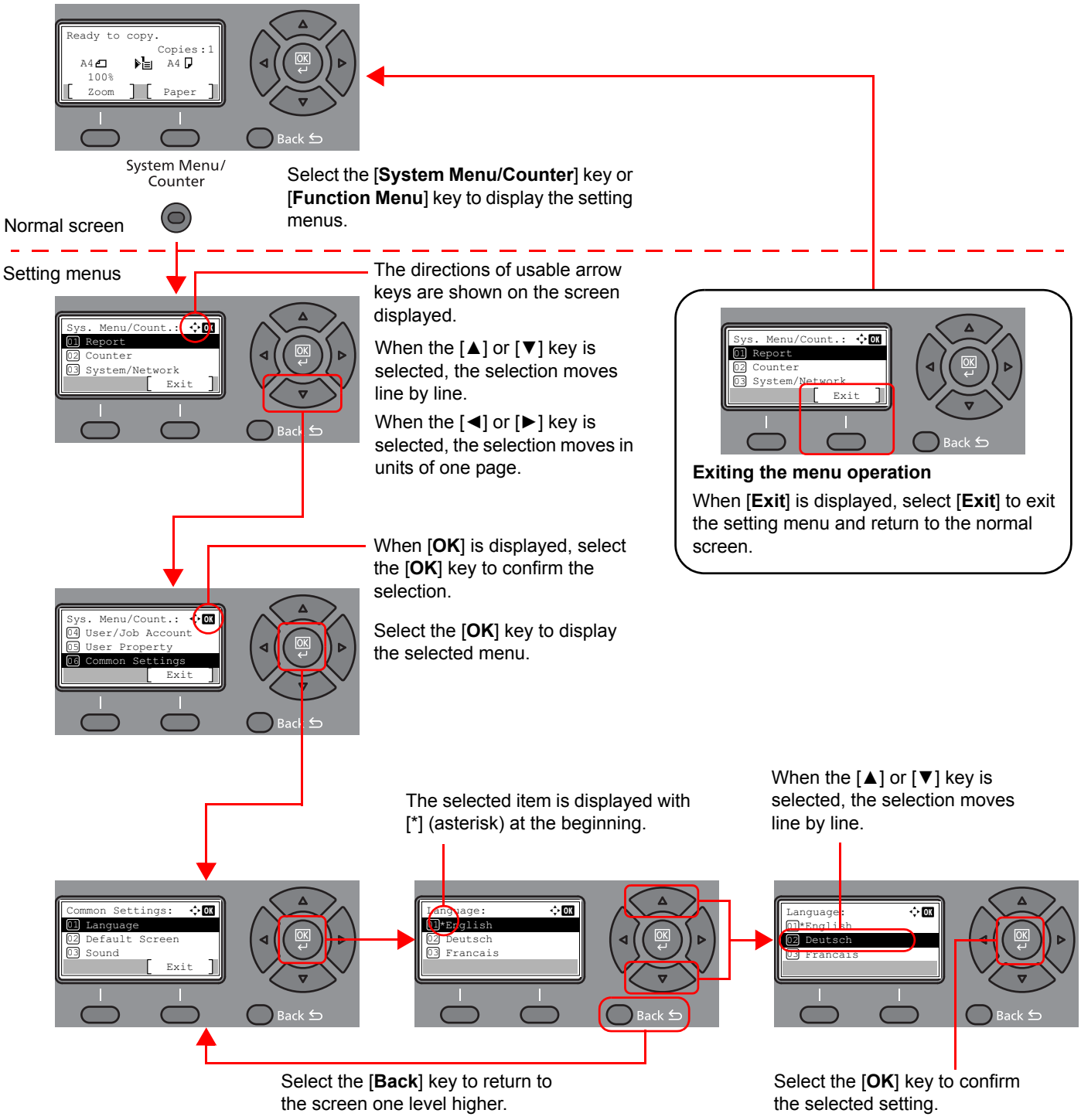

Check the original and paper settings

The current original and paper settings are displayed.

The copy screen is used here as an example.

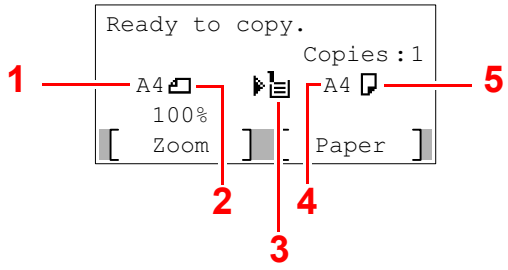

1 Original size
2 Original orientation
3 Paper source
4 Paper size
5 Paper orientation

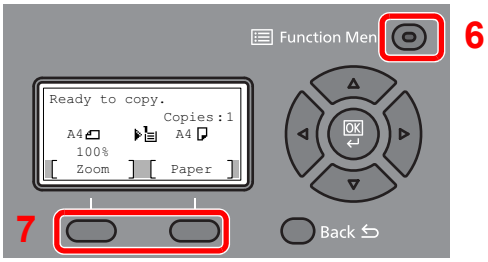

6 [**Function Menu**] key
7 Select keys

NOTE

- You can select the [**Function Menu**] key to configure original and paper settings.

Paper Selection (page 6-8)
Original Size (page 6-15)
Original Orientation (page 6-15)

- You can register frequently used functions in Select keys.

Select Key Set. (page 8-28)
Select Key Set. (page 8-31)

Help Screen

If you have difficulty operating the machine, you can check how to operate it using the operation panel.

When [**Help**] is displayed on the message display, select [**Help**] to display the Help screen. The Help screen shows machine operation.



Select the [▼] key to display the next step or select the [▲] key to display the previous step.

Select the [**OK**] key to exit the Help screen.

Login/Logout

If you are setting a function that requires administrator rights, or if user login administration is enabled, you must enter your login user name and login password.

NOTE

The factory default login user name and login password are set as shown below.

Model Name	Login User Name	Login Password
ECOSYS M2235dn/ECOSYS M2735dn	3500	3500

You will be unable to login if you forget your login user name or login password. In this event, login with administrator privileges and change your login user name or login password.

Login

1 Enter the login user name.

1 If the login screen is displayed during operations, select "Login User Name" and select the [**OK**] key.

NOTE

- If [**Netwk Authentic.**] is selected as the user authentication method, [**Menu**] is displayed. Select [**Menu**] and select [**Login Type**] and then it is possible to select the authentication destination as [**Local Authentic.**] or [**Netwk Authentic.**].
- Select [**Menu**] and select [**Domain**] and then it is possible to select from the domains registered.

2 Enter the login user name using the numeric keys and select the [**OK**] key.

NOTE

If Login Operation is [**Select Character**], then the screen is displayed to enter details by selecting from the characters on the message display.

Function Defaults (page 8-24)

Character Entry Method (page 11-8)

2 Enter the login password.

1 Select "Login Password" and select the [**OK**] key.

2 Enter the login password and select the [**OK**] key.

Character Entry Method (page 11-8)

3 Select [Login].

Logout



To logout from the machine, select the [**Authentication/Logout**] key to return to the login user name/login password entry screen.

Users are automatically logged out in the following circumstances:

- When the machine enters the sleep state.
- When the auto panel reset function is activated.

Default Settings of the Machine

Before using this machine, configure such settings as date and time, network configuration, and energy saving functions as needed.

NOTE

The default settings of the machine can be changed in System Menu.
For settings that are configurable from System Menu, refer to the following:

Setup and Registration (System Menu) (page 8-1)

Setting Date and Time

Follow the steps below to set the local date and time at the place of installation.

When you send an E-mail using the transmission function, the date and time as set here will be printed in the header of the E-mail message. Set the date, time and time difference from GMT of the region where the machine is used.

NOTE

- If user login administration is enabled, you can only change the settings by logging in with administrator privileges. If user login administration is disabled, the user authentication screen appears. Enter a login user name and password, and select [**Login**].
- The factory default login user name and login password are set as shown below.

Model Name	Login User Name	Login Password
ECOSYS M2235dn/ECOSYS M2735dn	3500	3500

- Be sure to set the time difference before setting the date and time.
- The correct time can be periodically set by obtaining the time from the network time server.

Command Center RX User Guide

1 Display the screen.

[**System Menu/Counter**] key > [▲] [▼] key > [**Common Settings**] > [**OK**] key > [▲] [▼] key > [**Date Setting**] > [**OK**] key

2 Configure the settings.

[▲] [▼] key > [**Time Zone**] > [**OK**] key > Select the time zone > [**OK**] key > [▲] [▼] key > [**Date/Time**] > [**OK**] key > Set the date/time > [**OK**] key > [▲] [▼] key > [**Date Format**] > [**OK**] key > Select the Date Format > [**OK**] key

Item	Description
Time Zone	Set the time difference from GMT. Choose the nearest listed location from the list. If you select a region that utilizes summer time, configure settings for summer time.
Date/Time	Set the date and time for the location where you use the machine. If you perform Send as E-mail, the date and time set here will be displayed on the header. **Value: Year (2000 to 2037), Month (1 to 12), Day (1 to 31), Hour (00 to 23), Minute (00 to 59), Second (00 to 59)**
Date Format	Select the display format of year, month, and date. The year is displayed in Western notation. **Value: Month/Day/Year, Day/Month/Year, Year/Month/Day**

NOTE
Select the [▲] or [▼] key to enter a number.
Select the [◄] or [►] key to move the position being entered, which is shown highlighted.

Network Setup

Configuring the Wired Network

The machine is equipped with network interface, which is compatible with network protocols such as TCP/IP (IPv4), TCP/IP (IPv6), NetBEUI, and IPSec. It enables network printing on the Windows, Macintosh, UNIX and other platforms.

Set up TCP/IP (IPv4) to connect to the Windows network.

Be sure to connect the network cable before configuring the settings.

Connecting LAN Cable (page 2-8)

For other network settings, refer to the following:

Network Setting (page 8-7)

NOTE

If user login administration is enabled, you can only change the settings by logging in with administrator privileges. If user login administration is disabled, the user authentication screen appears. Enter a login user name and password, and select [**Login**].

The factory default login user name and login password are set as shown below.

Model Name	Login User Name	Login Password
ECOSYS M2235dn/ECOSYS M2735dn	3500	3500

IPv4 setting

1 Display the screen.

[**System Menu/Counter**] key > [▲] [▼] key > [**System/Network**] > [**OK**] key > [▲] [▼] key > [**Network Setting**] > [**OK**] key > [▲] [▼] key > [**Wired Netwk. Set**] > [**OK**] key > [▲] [▼] key > [**TCP/IP Settings**] > [**OK**] key > [▲] [▼] key > [**IPv4 Setting**] > [**OK**] key

2 Configure the settings.

When setting the static IP address

1 [▲] [▼] key > [**DHCP**] > [**OK**] key > [▲] [▼] key > [**Off**] > [**OK**] key

2 [▲] [▼] key > [**IP Address**] > [**OK**] key

3 Set the IP address.

NOTE
You can set any value between 000 and 255.
Use the numeric keys or select the [▲] or [▼] key to enter a number.
Select the [◄] or [►] key to move the position being entered, which is shown highlighted.

4 Select the [**OK**] key.

5 [▲] [▼] key > [**Subnet Mask**] > [**OK**] key

6 Set the subnet mask.

NOTE
You can set any value between 000 and 255.
Use the numeric keys or select the [▲] or [▼] key to enter a number.
Select the [◄] or [►] key to move the position being entered, which is shown highlighted.

7 Select the [**OK**] key.

8 [▲] [▼] key > [**Default Gateway**] > [**OK**] key

9 Set the default gateway.

NOTE
You can set any value between 000 and 255.
Use the numeric keys or select the [▲] or [▼] key to enter a number.
Select the [◄] or [►] key to move the position being entered, which is shown highlighted.

10 Select the [**OK**] key.

11 [▲] [▼] key > [**Auto-IP**] > [**OK**] key

12 [**Off**] > [**OK**] key

IMPORTANT
After changing the setting, restart the network from System Menu, or turn the machine OFF and then ON.

Restart Network (page 8-12)

NOTE
Ask your network administrator for the IP address in advance, and have it ready when you configure this setting.
In the following cases, set the IP address of DNS server on the Command Center RX.

- When using the host name with "DHCP" setting set to "Off"
- When using the DNS server with IP address that is not assigned by DHCP automatically.

Setting the IP Address of the DNS Server, refer to the following:

Command Center RX User Guide

Energy Saver function

If a certain period of time elapses after the machine is last used, the machine automatically enters sleep mode, which minimizes power consumption. If the machine is not used while in sleep mode, the power automatically turns off.

NOTE

If user login administration is enabled, you can only change the settings by logging in with administrator privileges. If user login administration is disabled, the user authentication screen appears. Enter a login user name and password, and select [**Login**].

The factory default login user name and login password are set as shown below.

Model Name	Login User Name	Login Password
ECOSYS M2235dn/ECOSYS M2735dn	3500	3500

Sleep

To enter Sleep, select the [**Energy Saver**] key. Message display and all indicators on the operation panel will go out to save a maximum amount of power except the Energy Saver indicator. This status is referred to as Sleep.

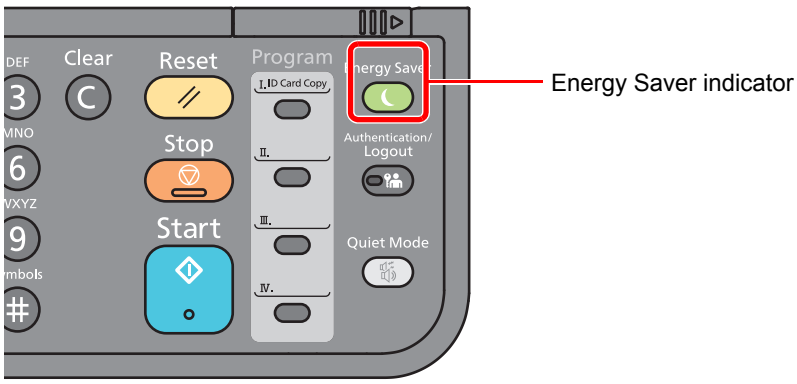

If print data is received during Sleep, the machine automatically wakes up and starts printing.

Also when fax data arrives while the machine is in Sleep, the machine automatically wakes up and starts printing.

To resume, perform the following actions.

- Select the [**Energy Saver**] key.

Recovery time from Sleep Mode is as follows.

- Within 10 seconds

Note that ambient environmental conditions, such as ventilation, may cause the machine to respond more slowly.

Auto Sleep

Auto Sleep automatically switches the machine into Sleep if left idle for a preset time.

The amount of time before entering Sleep is as follows.

- 1 minute (default setting)

To change the preset sleep time, refer to the following:

1 Display the screen.

[**System Menu/Counter**] key > [▲] [▼] key > [**Common Settings**] > [**OK**] key > [▲] [▼] key > [**Timer Setting**] > [**OK**] key > [▲] [▼] key > [**Sleep Timer**] > [**OK**] key

2 Set the Sleep time.

1 Enter the Sleep time.

> **NOTE**
> You can set any value below.
> - For Europe: 1 to 120 minutes (1 minute increments)
> - Except for Europe: 1 to 240 minutes
>
> Use the numeric keys or select the [▲] or [▼] key to enter a number.

2 Select the [**OK**] key.

Sleep Rules (models for Europe)

You can set whether sleep mode operates for each function. When the machine enters sleep mode, the ID card cannot be recognized.

For more information on Sleep Rules settings, refer to the following:

Sleep Rules (models for Europe) (page 8-22)

1 Display the screen.

[**System Menu/Counter**] key > [▲] [▼] key > [**Common Settings**] > [**OK**] key > [▲] [▼] key > [**Timer Setting**] > [**OK**] key > [▲] [▼] key > [**Sleep Rules**] > [**OK**] key

2 Set the Sleep rule.

1 Select the function to be set, and select the [**OK**] key.

[**Card Reader**] is displayed when the optional Card Authentication Kit is activated.

2 [▲] [▼] key > [**Off**] or [**On**] > [**OK**] key

Repeat steps 2-1 to 2-2 to set for a different function.

Sleep Level (Energy Saver and Quick Recovery) (models except for Europe)

For sleep level, you can toggle between the following two modes: Energy Saver mode and Quick Recovery mode. The default setting is Energy Saver mode.

Energy Saver mode reduces power consumption even more than Quick Recovery mode, and allows Sleep Mode to be set separately for each function. The ID card cannot be recognized.

To resume, select the [**Energy Saver**] key on the operation panel. If print data is received during Sleep, the machine automatically wakes up and starts printing.

For more information on Sleep Level settings, refer to the following:

Sleep Level (models except for Europe) (page 8-22)

1 Display the screen.

[**System Menu/Counter**] key > [▲] [▼] key > [**Common Settings**] > [**OK**] key > [▲] [▼] key > [**Timer Setting**] > [**OK**] key > [▲] [▼] key > [**Sleep Level**] > [**OK**] key

2 Select the Sleep level.

[▲] [▼] key > [**Quick Recovery**] or [**Energy Saver**] > [**OK**] key

When [**Energy Saver**] is set, next go on to set whether or not to use Energy Saver mode for each function.

3 Set the Sleep rule.

1 Select the function to be set, and select the [**OK**] key.

[**Card Reader**] is displayed when the optional Card Authentication Kit is activated.

[**FAX**] is displayed only on products with the fax function installed.

2 [▲] [▼] key > [**Off**] or [**On**] > [**OK**] key

Repeat steps 3-1 to 3-2 to set for a different function.

Power Off Rule (models for Europe)

The Power Off Rule is used to stop the power from automatically turning off.

The default preset time is 3 days.

For more information on Power Off Rule settings, refer to the following:

Power Off Rule (models for Europe) (page 8-23)

Quiet Mode

Lower print speed for quiet processing. Select this mode when the running noise is uncomfortable.
When the [**Quiet Mode**] key is selected, the [**Quiet Mode**] key blinks and Quiet Mode is enabled.

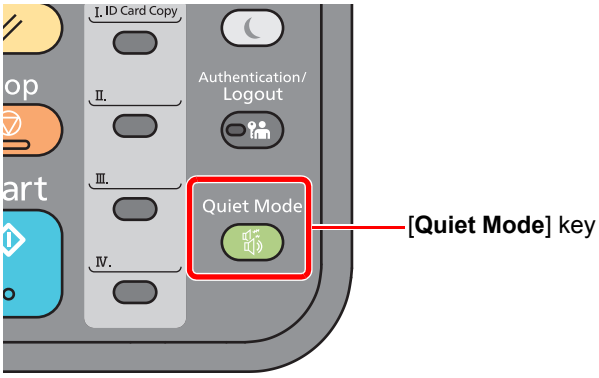

NOTE

The processing speed will be slower than normal when in Quiet Mode.

Installing Software

Install appropriate software on your PC from the included DVD (Product Library) if you want to use the printer function of this machine or perform TWAIN / WIA transmission or Network FAX transmission from your PC.

Software on DVD (Windows)

You can use either [**Express Install**] or [**Custom Install**] can be selected for the installation method. [**Express Install**] is the standard installation method. To install components that cannot be installed by [**Express Install**], use [**Custom Install**].

For details on Custom Installation, refer to the following:

Custom Install (page 2-27)

Software	Description	Express Install
KX DRIVER	This driver enables files on a computer to be printed by the machine. Multiple page description languages (PCL XL, KPDL, etc.) are supported by a single driver. This printer driver allows you to take full advantage of the features of the machine. Use this driver to create PDF files.	○
KX XPS DRIVER	This printer driver supports the XPS (XML Paper Specification) format developed by Microsoft Corporation.	-
KPDL mini-driver/PCL mini-driver	This is a Microsoft MiniDriver that supports PCL and KPDL. There are some restrictions on the machine features and option features that can be used with this driver.	-
FAX Driver	This makes it possible to send a document created in a computer software application as a fax via the machine.	-
Kyocera TWAIN Driver	This driver enables scanning on the machine using a TWAIN-compliant software application.	○
Kyocera WIA Driver	WIA (Windows Imaging Acquisition) is a function of Windows that enables reciprocal communication between an imaging device such as a scanner and an image processing software application. An image can be acquired using a WIA-compliant software application, which is convenient when a TWAIN-compliant software application is not installed in the computer.	-
KYOCERA Net Viewer	This is a utility that enables monitoring of the machine on the network.	-
Status Monitor	This is a utility that monitors the printer status and provides an ongoing reporting function.	○
KYOCERA Net Direct Print	This makes it possible to print a PDF file without starting Adobe Acrobat/ Reader.	-
FONTS	These are display fonts that enable the machine's built-in fonts to be used in a software application.	○

NOTE

- Installation on Windows must be done by a user logged on with administrator privileges.
- Fax functionality can only be used on products equipped with fax capability.
- WIA Driver and KX XPS DRIVER cannot be installed on Windows XP.

Installing Software in Windows

Express Install

The following procedure is an example for installing the software in Windows 8.1 using [**Express Install**].

For details on Custom Installation, refer to the following:

Custom Install (page 2-27)

1 Insert the DVD.

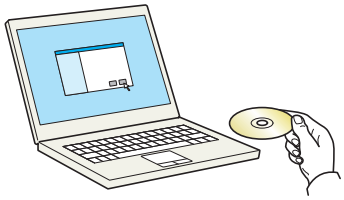

NOTE

- Installation on Windows must be done by a user logged on with administrator privileges.
- If the "**Welcome to the Found New Hardware Wizard**" dialog box displays, select [**Cancel**].
- If the autorun screen is displayed, click [**Run setup.exe**].
- If the user account management window appears, click [**Yes**] ([**Allow**]).

2 Display the screen.

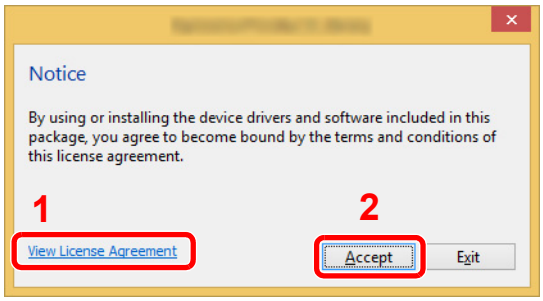

1 Click [**View License Agreement**] and read the License Agreement.

2 Click [**Accept**].

3 Select [Express Install].

4 Install the software.

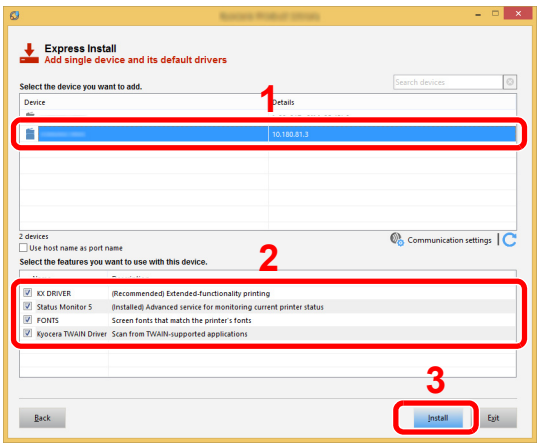

You can also select [**Use host name for port name**] and set to use the host name of the standard TCP/IP port. (A USB connection cannot be used.)

NOTE

- The machine cannot be detected unless it is on. If the computer fails to detect the machine, verify that it is connected to the computer via a network or USB cable and that it is turned on and click (Reload).
- If the Windows security window appears, click [**Install this driver software anyway**].
- To install Status Monitor on Windows versions preceding Windows 8, it is necessary to install Microsoft .NET Framework 4.0 beforehand.

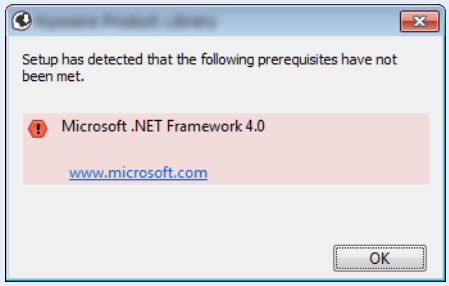

5 Finish the installation.

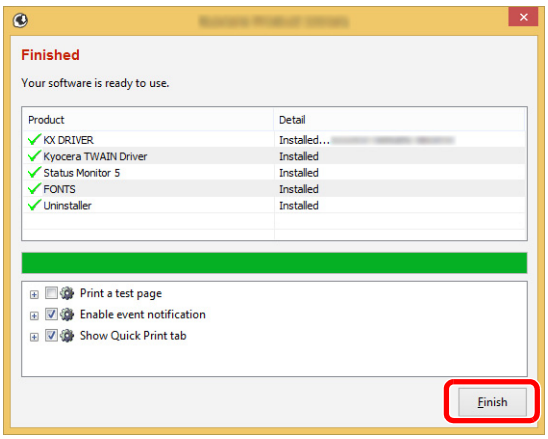

When "**Your software is ready to use**" appears, you can use the software. To print a test page, click the "**Print a test page**" checkbox and select the machine.

Click [**Finish**] to exit the wizard.

NOTE

When you have selected [**Device settings**] in Windows XP, the dialog box for device setting will appear after [**Finish**] is clicked. Configure the settings for options installed on the machine. Device settings can be configured after the installation is completed.

Printer Driver User Guide

If a system restart message appears, restart the computer by following the screen prompts. This completes the printer driver installation procedure.

If you are installing the TWAIN driver, continue by configuring the following:

Setting TWAIN Driver (page 2-34)

Custom Install

The following procedure is an example for installing the software in Windows 8.1 using [**Custom Install**].

1 Insert the DVD.

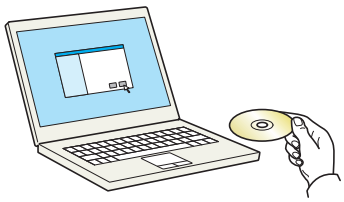

NOTE

- Installation on Windows must be done by a user logged on with administrator privileges.
- If the "**Welcome to the Found New Hardware Wizard**" dialog box displays, select [**Cancel**].
- If the autorun screen is displayed, click [**Run setup.exe**].
- If the user account management window appears, click [**Yes**] ([**Allow**]).

2 Display the screen.

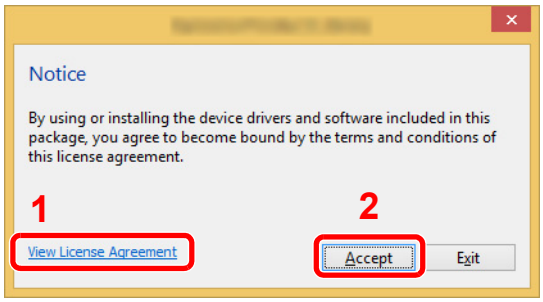

1 Click [**View License Agreement**] and read the License Agreement.

2 Click [**Accept**].

3 Select [Custom Install].

4 Install the software.

1 Select the device to be installed.

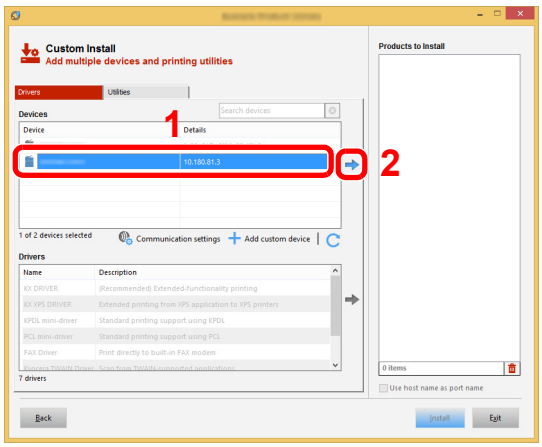

NOTE

- The machine cannot be detected unless it is on. If the computer fails to detect the machine, verify that it is connected to the computer via a network or USB cable and that it is turned on and click (Reload).
- If the desired device does not appear, select [**Add custom device**] to directly select the device.

2 Select the driver to be installed.

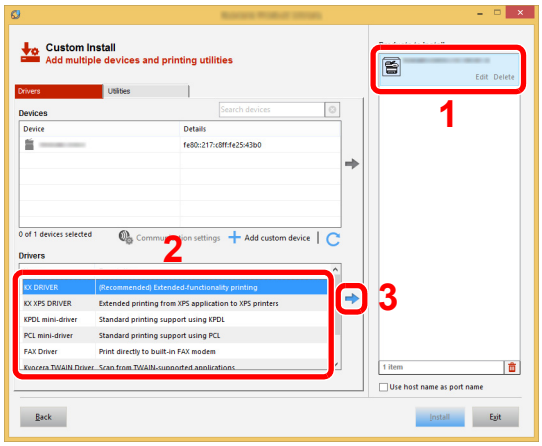

3 Click [**Utility**] tab and select the utility to be installed.

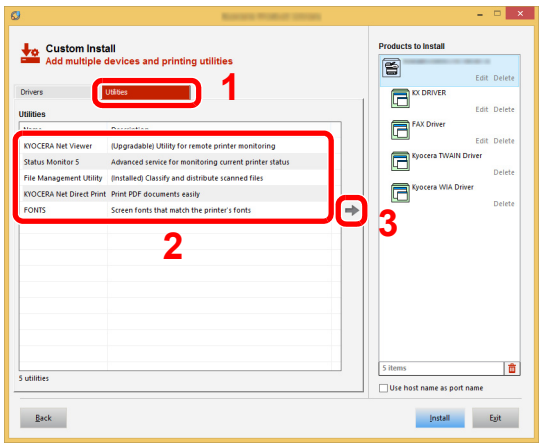

4 Click [**Install**].

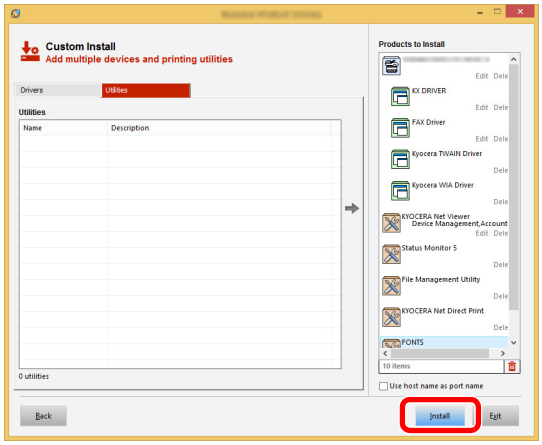

NOTE

To install Status Monitor on Windows versions preceding Windows 8, it is necessary to install Microsoft .NET Framework 4.0 beforehand.

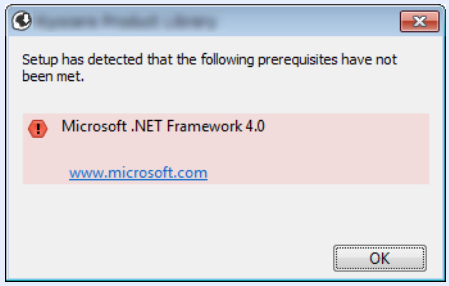

5 Finish the installation.

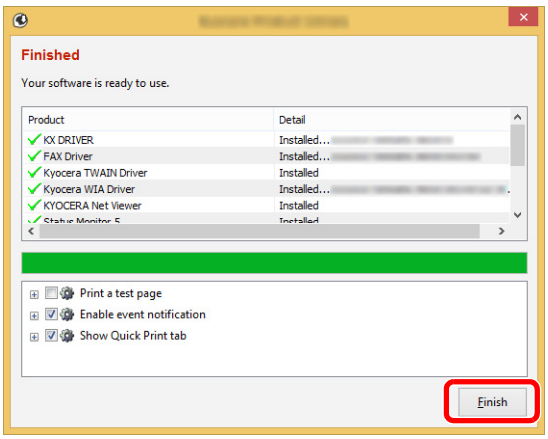

When "**Your software is ready to use**" appears, you can use the software. To print a test page, click the "**Print a test page**" checkbox and select the machine.

Click [**Finish**] to exit the wizard.

NOTE

When you have selected [**Device settings**] in Windows XP, the dialog box for device setting will appear after [**Finish**] is clicked. Configure the settings for options installed on the machine. Device settings can be configured after the installation is completed.

Printer Driver User Guide

If a system restart message appears, restart the computer by following the screen prompts. This completes the printer driver installation procedure.

If you are installing the TWAIN driver, continue by configuring the following:

Setting TWAIN Driver (page 2-34)

Uninstalling the Software

Perform the following procedure to delete the Software from your computer.

NOTE

Uninstallation on Windows must be done by a user logged on with administrator privileges.

1 Display the screen.

Click [**Search**] in charms, and enter "Uninstall Kyocera Product Library" in the search box. Select [**Uninstall Kyocera Product Library**] in the search list.

NOTE

In Windows 7, click [**Start**] button on the Windows and then select [**All Programs**], [**Kyocera**], and [**Uninstall Kyocera Product Library**] to display the Uninstall Wizard.

2 Uninstall the software.

Place a check in the check box of the software to be deleted.

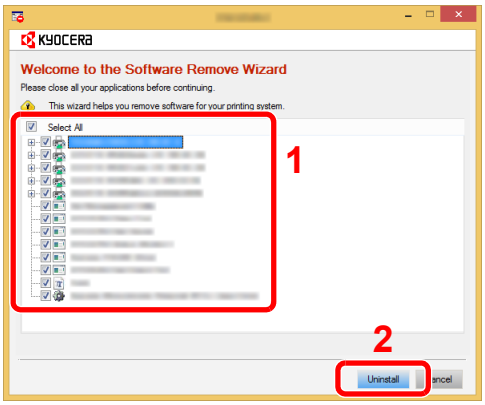

3 Finish uninstalling.

If a system restart message appears, restart the computer by following the screen prompts. This completes the software uninstallation procedure.

NOTE

The software can also be uninstalled using the Product Library.

In the Product Library screen, click [**Uninstall**], and follow the on-screen instructions to uninstall the software.

Installing Software in Mac Computer

The machine's printer functionality can be used by a Mac computer.

NOTE

- Installation on Mac OS must be done by a user logged on with administrator privileges.
- When printing from a Macintosh computer, set the machine's emulation to [**KPDL**] or [**KPDL(Auto)**].

Printer (page 8-29)

- If connecting by Bonjour, enable Bonjour in the machine's network settings.

Bonjour (page 8-8)

- In the Authenticate screen, enter the name and password used to log in to the operating system.
- When printing via AirPrint, you do not have to install the software.

1 Insert the DVD.

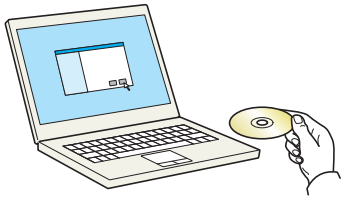

Double-click the [**Kyocera**] icon.

2 Display the screen.

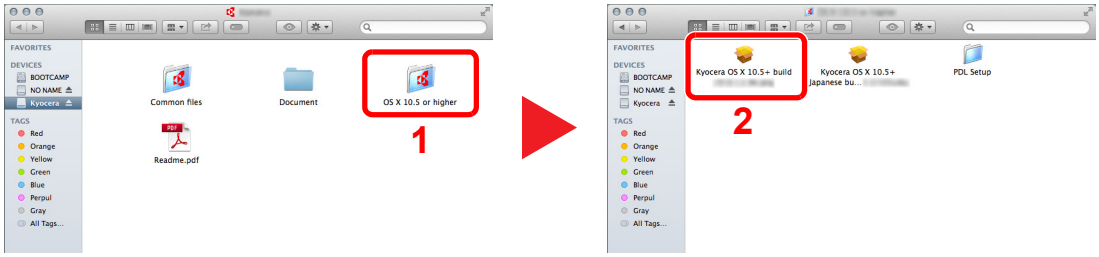

Double-click [**Kyocera OS X x.x**] depending on your Mac OS version.

3 Install the Printer Driver.



Install the printer driver as directed by the instructions in the installation software.

This completes the printer driver installation.

If a USB connection is used, the machine is automatically recognized and connected.
If an IP connection is used, the settings below are required.

4 Configure the printer.

1 Open System Preferences and add the printer.

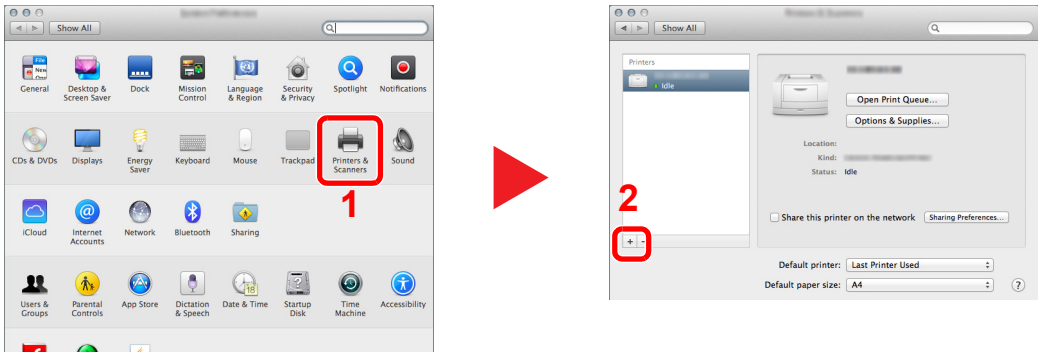

2 Select [**Default**] and click the item that appears in "Name" and then select the driver in "Use".

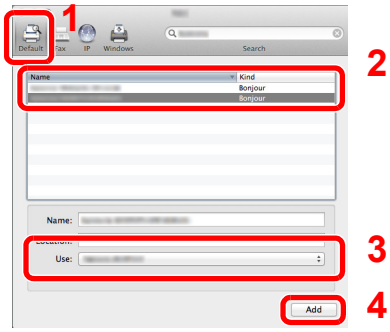

NOTE

When using an IP connection, click the IP icon for an IP connection and then enter the host name or IP address. The number entered in "Address" will automatically appear in "Name". Change if needed.

3 Select the options available for the machine.

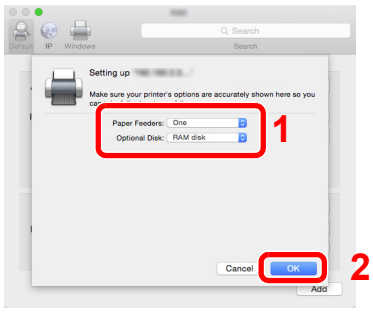

4 The selected machine is added.

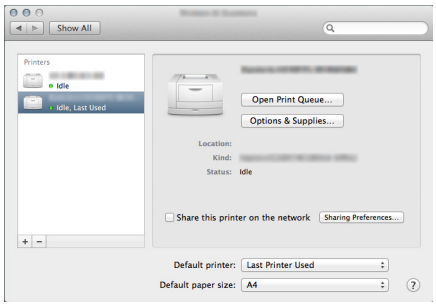

Setting TWAIN Driver

Register this machine to the TWAIN Driver. Instructions are based on interface elements as they appear in Windows 8.1.

1 Display the screen.

1 Click [**Search**] in charms, and enter "TWAIN Driver Setting" in the search box. Select [**TWAIN Driver Setting**] in the search list.

NOTE

In Windows 7, select [**Start**] button on the Windows, [**All Programs**], [**Kyocera**] and then [**TWAIN Driver Setting**]. TWAIN Driver screen appears.

2 Click [**Add**].

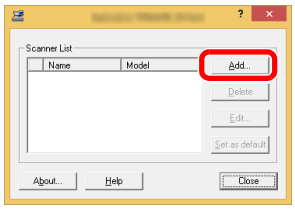

2 Configure TWAIN Driver.

(Network)

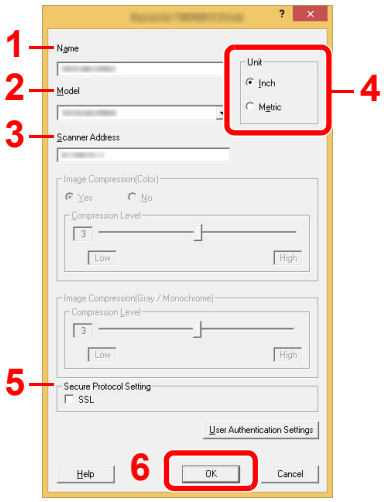

1 Enter the machine name.

2 Select this machine from the list.

3 Enter the machine's IP address or host name.

4 Set units of measurement.

5 When using SSL, select the checkbox beside SSL.

6 Click [**OK**].

(USB)

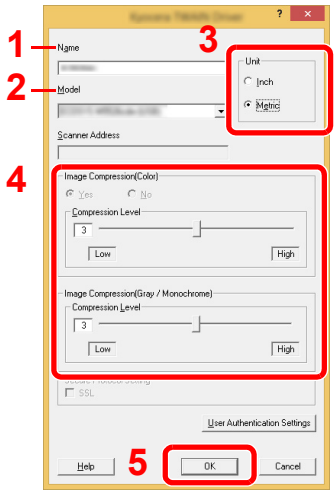

1 Enter the machine name.

2 Select this machine from the list.

3 Set units of measurement.

4 Set Compression Level.

5 Click [**OK**].

NOTE

When the machine's IP address or host name is unknown, contact Administrator.

3 Finish registering.

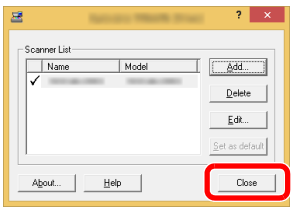

NOTE

Click [**Delete**] to delete the added machine. Click [**Edit**] to change names.

Setting WIA Driver

Register this machine to the WIA Driver. Instructions are based on interface elements as they appear in Windows 8.1.

1 Display the screen.

1 Click [**Search**] in charms, and enter "View scanners and cameras" in the search box. Select [**View scanners and cameras**] in the search list then the Scanners and Cameras screen appears.

> **NOTE**
> In Windows 7, click [**Start**] button on the Windows and enter [**Scanner**] in [**Program and File Search**]. Click [**View scanners and cameras**] in the search list then the Scanners and Cameras screen appears.

2 Select the same name as this machine from WIA Drivers, and click [**Properties**].

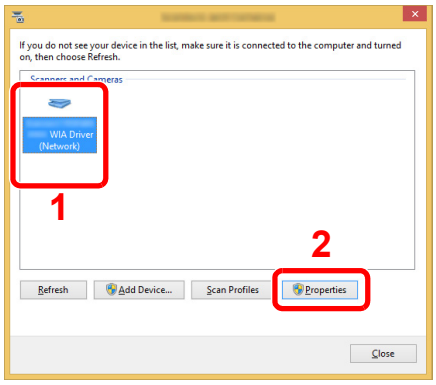

2 Configure WIA Driver.

(Network)

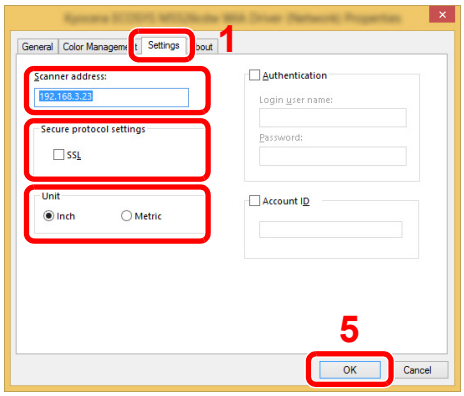

1 Click the [**Settings**] tab.

2 Enter the machine IP addresses or host name.

3 When using SSL, select the checkbox beside SSL.

4 Set units of measurement.

5 Click [**OK**].

(USB)

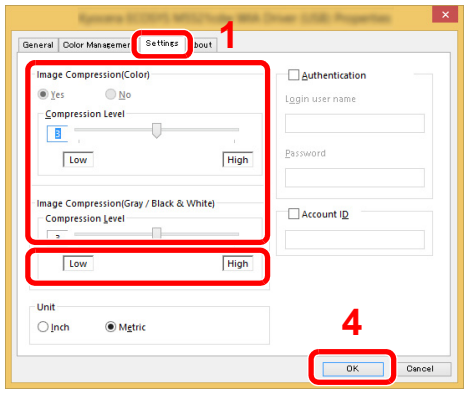

1 Click the [**Settings**] tab.

2 Set the Compression Level.

3 Set units of measurement.

4 Click [**OK**].

Checking the Counter

Check the number of sheets printed and scanned.

1 Display the screen.

[**System Menu/Counter**] key > [▲] [▼] key > [**Counter**] > [**OK**] key

2 Check the counter.

Select the item you want to check, and select the [**OK**] key.

Additional Preparations for the Administrator

In addition to the information provided in this chapter, the administrator of this machine should check the following, and configure the settings as needed.

Sending Documents to a PC

To Send to a Shared Folder (Send to Folder (SMB))

To send a document that has been loaded, you need to create a shared folder to receive the document on your computer.

Preparation for Sending a Document to a Shared Folder in a PC (page 3-8)

To E-mail Scanned Images (Send as E-mail)

You can send a scanned original image as an E-mail attachment.

E-mail Settings (page 2-45)

Strengthening the Security

This machine is shipped with two default users registered one with Machine Administrator rights, and another with Administrator rights.Logging in as this user will allow you to configure all settings; therefore, please change the login user name and password.

In addition, this machine is equipped with user authentication function, which can be configured to limit the access to this machine to only those who have a registered login name and password.

User Authentication and Accounting (User Login, Job Accounting) (page 9-1)

I want to...	Function	Reference page
Restrict the users of the machine.	User Login	page 9-2
	Auto Panel Reset	page 8-22
	ID Card Settings*1	page 9-20
Restrict the basic functions that can be used.	Group Authorization Set.	page 9-15
Prevent the data stored in the machine from being leaked.	PDF Encryption Functions	page 6-25
Protect the transmission from interception and wiretapping.	IPP over SSL	page 8-10
	HTTPS	page 8-10
	LDAP Security	Refer to the **Command Center RX User Guide**.
	SMTP Security	Refer to the **Command Center RX User Guide**.
	POP3 Security	Refer to the **Command Center RX User Guide**.
	FTP Encrypted TX	page 6-27
	IPSec	page 8-8
	SNMPv3	page 8-9

*1 The optional Card Authentication Kit is required.

Command Center RX

If the machine is connected to the network, you can configure various settings using Command Center RX.

This section explains how to access Command Center RX, and how to change security settings and the host name.

Command Center RX User Guide

NOTE

To fully access the features of the Command Center RX pages, enter the User Name and Password and click [**Login**]. Entering the predefined administrator password allows the user to access all pages, including Document Box, Address Book, and Settings on the navigation menu. The factory default setting for the default user with administrator privileges is shown below. (Upper case and lower case letters are distinguished (case sensitive).)

Login User Name: **Admin**
Login Password: **Admin**

Settings that the administrator and general users can configure in Command Center RX are as follows.

Setting	Description	Administ-rator	General User
Device Information	The machine's structure can be checked.	○	○
Job Status	Displays all device information, including print and scan jobs, storing jobs, scheduled jobs, and job log history.	○	○
Document Box	Configures settings related to the Job Box.	○	-
Address Book	Create, edit, or delete addresses and address groups.	○	○*1
Device Settings	Configure the advanced settings of the machine.	○	-
Function Settings	Configure the advanced function settings.	○	-
Network Settings	Configure the network advanced settings.	○	-
Security Settings	Configure the security advanced settings.	○	-
Management Settings	Configure the advanced management settings.	○	-

*1 The logged in user may not be able to configure some settings, depending on the permissions of the user.

NOTE

- FAX functions are available only on products with the fax function installed.
- Here, information on the FAX settings has been omitted.

FAX Operation Guide

Accessing Command Center RX

1 Display the screen.

1 Launch your Web browser.

2 In the address or location bar, enter the machine's IP address or the host name.

Click in the following order to check the machine's IP address and the host name.

[**System Menu/Counter**] key > [▲] [▼] key > [**Report**] > [**OK**] key > [▲] [▼] key > [**Report Print**] > [**OK**] key > [▲] [▼] key > [**Status Page**] > [**OK**] key > [**Yes**]

Examples: https://192.168.48.21/ (for IP address)
https://MFP001 (if the host name is "MFP001")

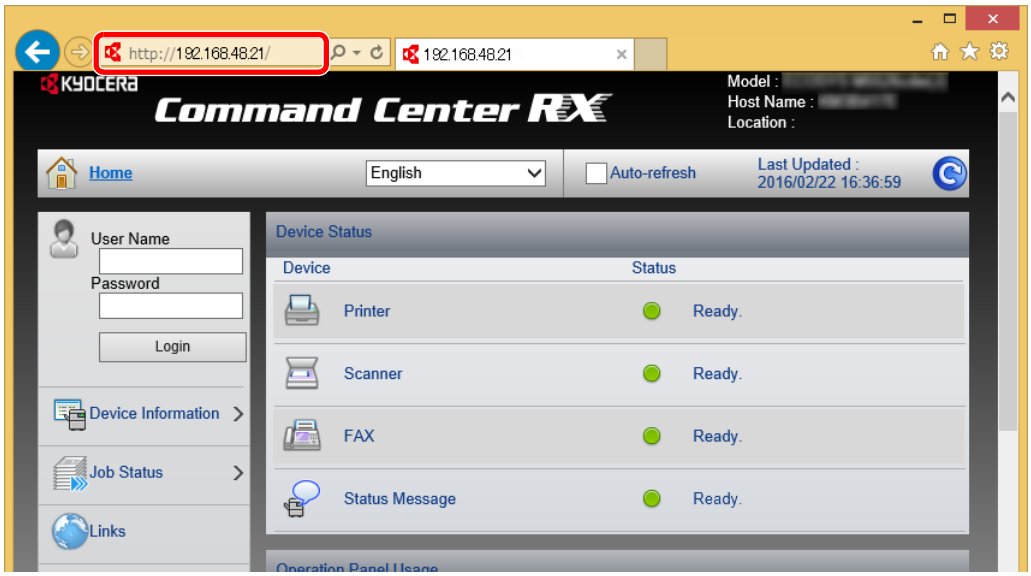

The web page displays basic information about the machine and Command Center RX as well as their current status.

NOTE

If the screen "There is a problem with this website's security certificate." is displayed, configure the certificate.

Command Center RX User Guide

You can also continue the operation without configuring the certificate.

2 Configure the function.

Select a category from the navigation bar on the left of the screen.

NOTE

To fully access the features of the Command Center RX pages, enter the User Name and Password and click [**Login**]. Entering the predefined administrator password allows the user to access all pages, including Document Box, Address Book, and Settings on the navigation menu. The factory default setting for the default user with administrator privileges is shown below. (Upper case and lower case letters are distinguished (case sensitive).)

Login User Name: **Admin**
Login Password: **Admin**

Changing Security Settings

1 Display the screen.

1 Launch your Web browser.

2 In the address or location bar, enter the machine's IP address or the host name.

Click in the following order to check the machine's IP address and the host name.

[**System Menu/Counter**] key > [▲] [▼] key > [**Report**] > [**OK**] key > [▲] [▼] key > [**Report Print**] > [**OK**] key > [▲] [▼] key > [**Status Page**] > [**OK**] key > [**Yes**]

3 Log in with administrator privileges.

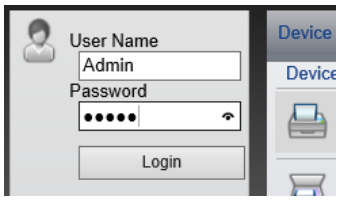

The factory default setting for the default user with administrator privileges is shown below. (Upper case and lower case letters are distinguished (case sensitive).)

Login User Name: Admin
Login Password: Admin

4 Click [**Security Settings**].

2 Configure the Security Settings.

From the [**Security Settings**] menu, select the setting you want to configure.

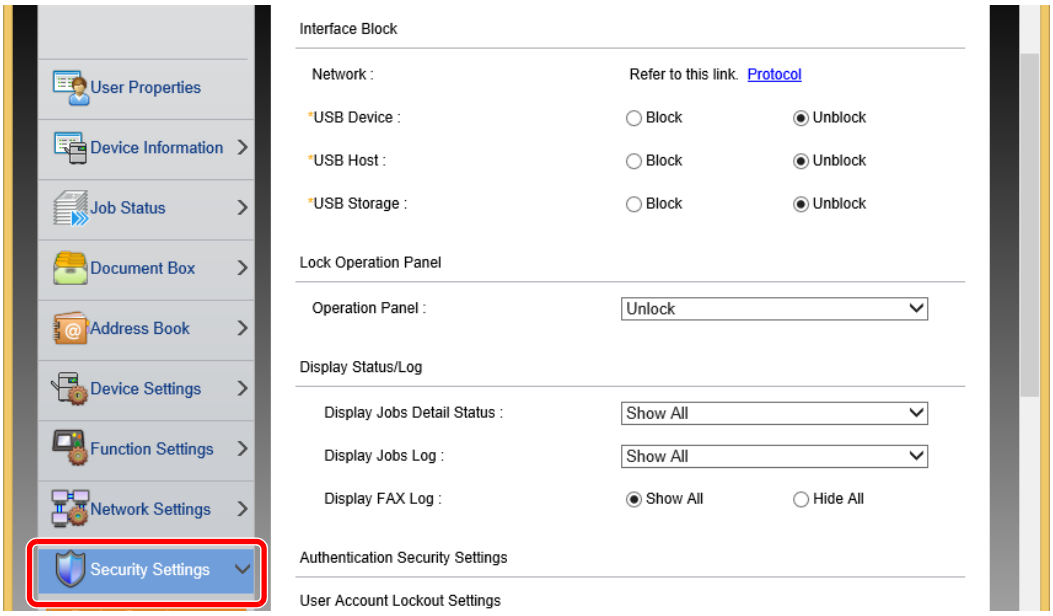

NOTE

For details on settings related to certificates, refer to the following:

Command Center RX User Guide

Changing Device Information

1 Display the screen.

1 Launch your Web browser.

2 In the address or location bar, enter the machine's IP address or the host name.

Click in the following order to check the machine's IP address and the host name.

[**System Menu/Counter**] key > [▲] [▼] key > [**Report**] > [**OK**] key > [▲] [▼] key > [**Report Print**] > [**OK**] key > [▲] [▼] key > [**Status Page**] > [**OK**] key > [**Yes**]

3 Log in with administrator privileges.

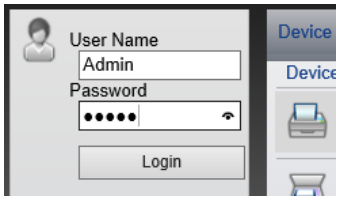

The factory default setting for the default user with administrator privileges is shown below. (Upper case and lower case letters are distinguished (case sensitive).)

Login User Name: Admin
Login Password: Admin

4 From the [**Device Settings**] menu, click [**System**].

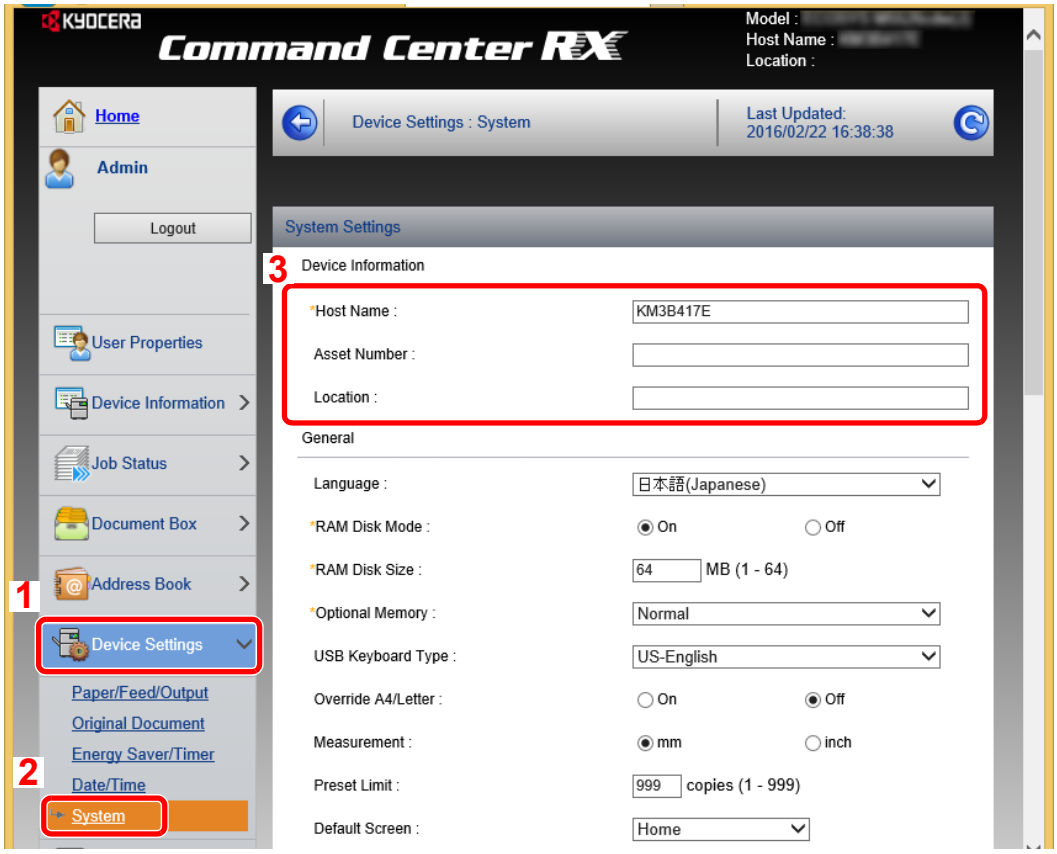

2 Specify the host name.

Enter the device information, and then click [**Submit**].

IMPORTANT

After changing the setting, restart the network or turn the machine OFF and then ON.

To restart the network, click [Reset] in the [Management Settings] menu, and then click [Restart Network] in "Restart".

E-mail Settings

By configuring the SMTP settings, it is possible to send the images scanned by the machine as E-mail attachments and to send E-mail notices when jobs have been completed.

To use this function, this machine must be connected to a mail server using the SMTP protocol.

In addition, configure the following.

- SMTP settings
  Item: "SMTP Protocol" and "SMTP Server Name" in "SMTP"
- The sender address when the machine sends E-mails
  Item: "Sender Address" in "E-mail Send Settings"
- The setting to limit the size of E-mails
  Item: "E-mail Size Limit" in "E-mail Send Settings"

The procedure for specifying the SMTP settings is explained below.

1 Display the screen.

Display the SMTP Protocol screen.

1 Launch your Web browser.

2 In the address or location bar, enter the machine's IP address or the host name.

Click in the following order to check the machine's IP address and the host name.

[**System Menu/Counter**] key > [▲] [▼] key > [**Report**] > [**OK**] key > [▲] [▼] key > [**Report Print**] > [**OK**] key > [▲] [▼] key > [**Status Page**] > [**OK**] key > [**Yes**]

3 Log in with administrator privileges.

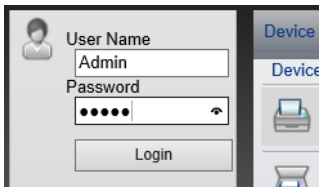

The factory default setting for the default user with administrator privileges is shown below. (Upper case and lower case letters are distinguished (case sensitive).)

Login User Name: Admin
Login Password: Admin

4 From the [**Network Settings**] menu, click [**Protocol**].

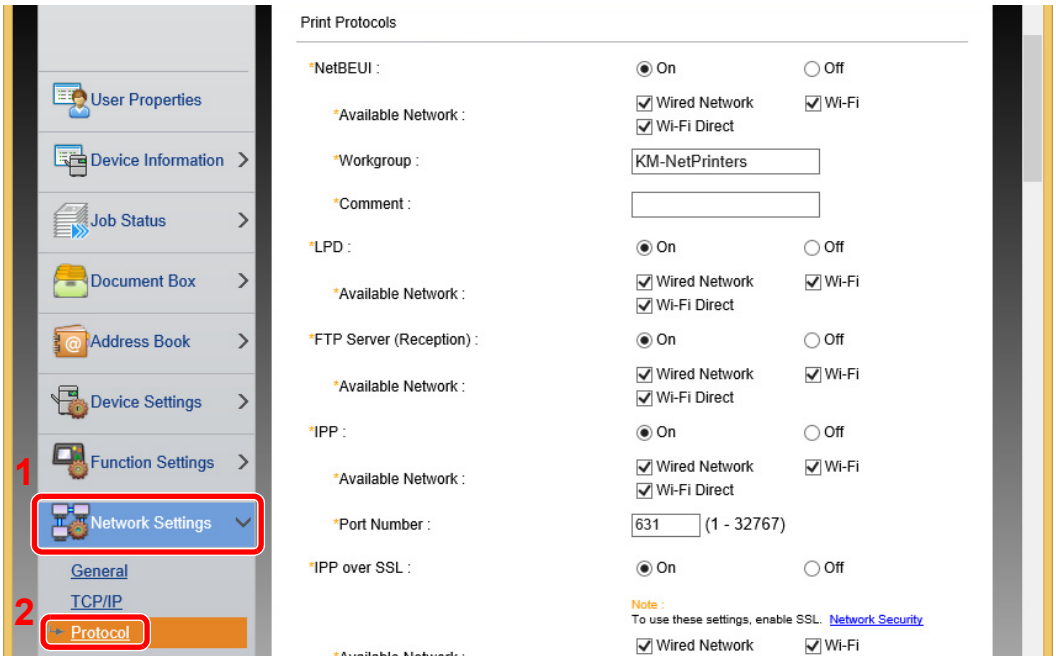

2 Configure the settings.

Set "SMTP (E-mail TX)" to [**On**] in the "Send Protocols".

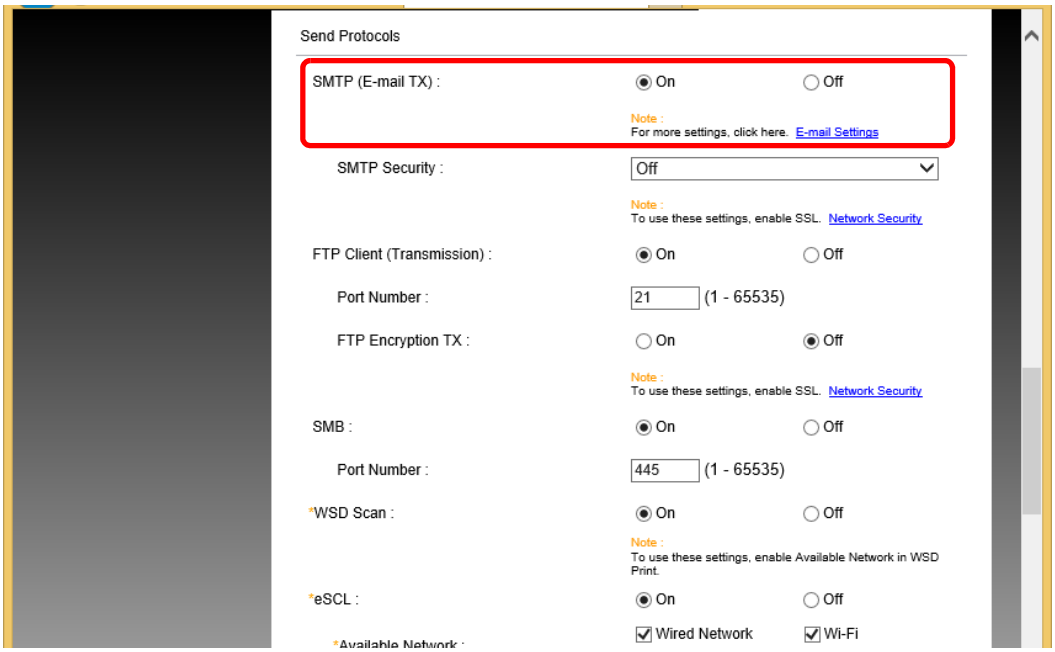

3 Display the screen.

Display the E-mail Settings screen.

From the [**Function Settings**] menu, click [**E-mail**].

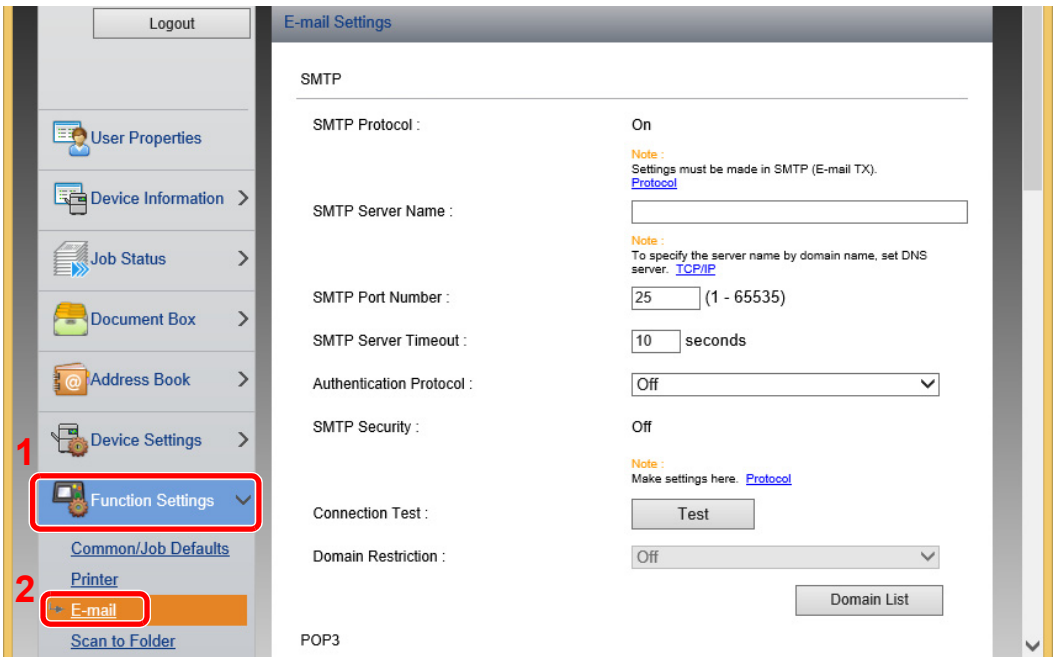

4 Configure the settings.

Enter "SMTP" and "E-mail Send Settings" items.

Setting		Description
SMTP		Set to send e-mail from the machine.
	SMTP Protocol	Displays the SMTP protocol settings. Check that "SMTP Protocol" is set to [**On**]. If [**Off**] is set, click [**Protocol**] and set the SMTP protocol to [**On**].
	SMTP Server Name[*1]	Enter the host name or IP address of the SMTP server.
	SMTP Port Number	Specify the port number to be used for SMTP. The default port number is 25.
	SMTP Server Timeout	Set the amount of time to wait before time-out in seconds.
	Authentication Protocol	To use SMTP authentication, enter the user information for authentication.
	SMTP Security	Set SMTP security. Turn on "SMTP Security" in "SMTP (E-mail TX)" on the [**Protocol Settings**] page.
	Connection Test	Tests to confirm that the E-mail function is operating under the settings without sending a mail.
	Domain Restriction	To restrict the domains, click the [**Domain List**] and enter the domain names of addresses to be allowed or rejected. Restriction can also be specified by e-mail address.
POP3	**POP3 Protocol**	You don't need to set the following items when you only enable the function of sending e-mail from the machine. Set the following items if you want to enable the function of receiving e-mail on the machine. ➔ **Command Center RX User Guide**
	Check Interval	
	Run once now	
	Domain Restriction	
	POP3 User Settings	
E-mail Send Settings	**E-mail Size Limit**	Enter the maximum size of E-mail that can be sent in kilobytes. When E-mail size is greater than this value, an error message appears and E-mail sending is cancelled. Use this setting if you have set E-mail Size Limit for SMTP server. If not, enter a value of 0 (zero) to enable E-mail sending regardless of the size limit.
	Sender Address[*1]	Specify the sender address for when the machine sends E-mails, such as the machine administrator, so that a reply or non-delivery report will go to a person rather than to the machine. The sender address must be entered correctly for SMTP authentication. The maximum length of the sender address is 128 characters.
	Signature	Enter the signature. The signature is free form text that will appear at the end of the E-mail body. It is often used for further identification of the machine. The maximum length of the signature is 512 characters.
	Function Defaults	Change the function default settings in [**Common/Job Default Settings**] page.

*1 Be sure to enter the items.

5 Click [Submit].

Registering Destinations

1 Display the screen.

1 Launch your Web browser.

2 In the address or location bar, enter the machine's IP address or the host name.

Click in the following order to check the machine's IP address and the host name.

[**System Menu/Counter**] key > [▲] [▼] key > [**Report**] > [**OK**] key > [▲] [▼] key > [**Report Print**] > [**OK**] key > [▲] [▼] key > [**Status Page**] > [**OK**] key > [**Yes**]

3 Log in with administrator privileges.

The factory default setting for the default user with administrator privileges is shown below. (Upper case and lower case letters are distinguished (case sensitive).)

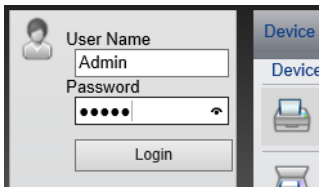

Login User Name: Admin
Login Password: Admin

4 From the [**Address Book**] menu, click [**Machine Address Book**].

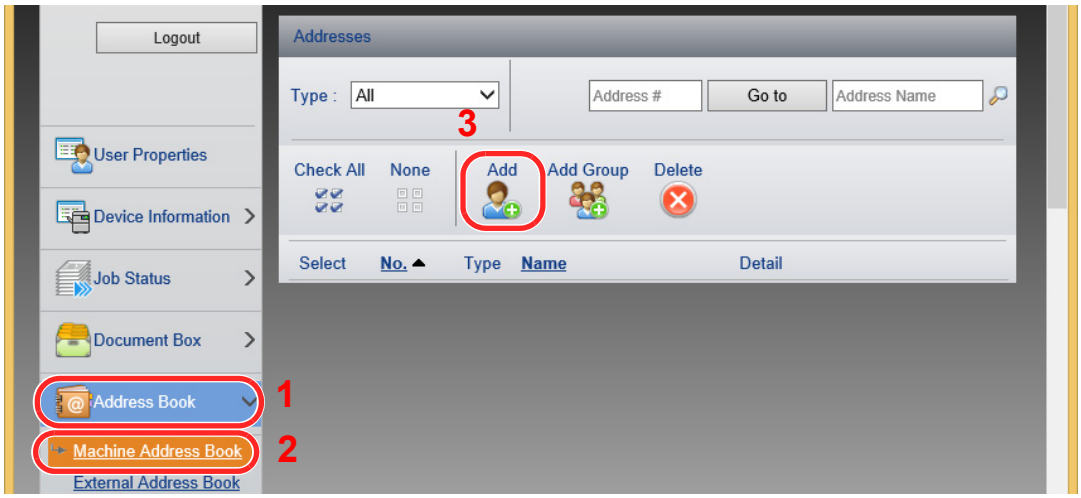

5 Click [**Add**].

2 Populate the fields.

1 Enter the destination information.

Enter the information for the destination you want to register. The fields to populate are the same as when registering via operation panel.

Registering Destinations in the Address Book (page 3-18)

2 Click [**Submit**].

Transferring Data from Our Other Products

By using the machine's utility, you can smoothly migrate address books when the machine is to be replaced.

This section explains how to transfer data between our products.

Migrating the Address Book

The Address Book registered on the machine can be backed up or migrated using the KYOCERA Net Viewer on the included DVD.

For details on operating the KYOCERA Net Viewer, refer to the following:

KYOCERA Net Viewer User Guide

Backing Up Address Book Data to PC

1 Launch the KYOCERA Net Viewer.

2 Create a backup.

1 Right-click on the model name from which you want to back up the Address Book, and select [**Advanced**] - [**Set multiple devices**].

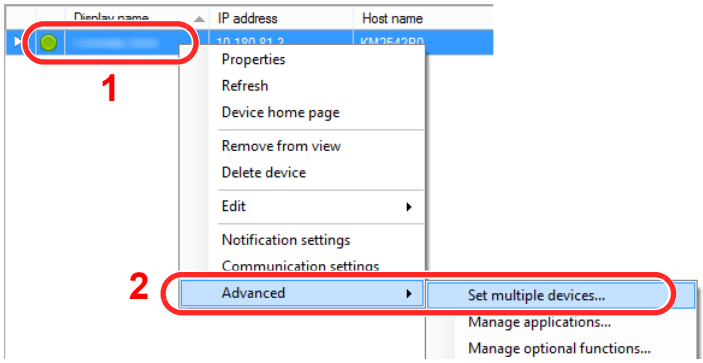

2 Select [**Custom Mode**] and click [**Next**].

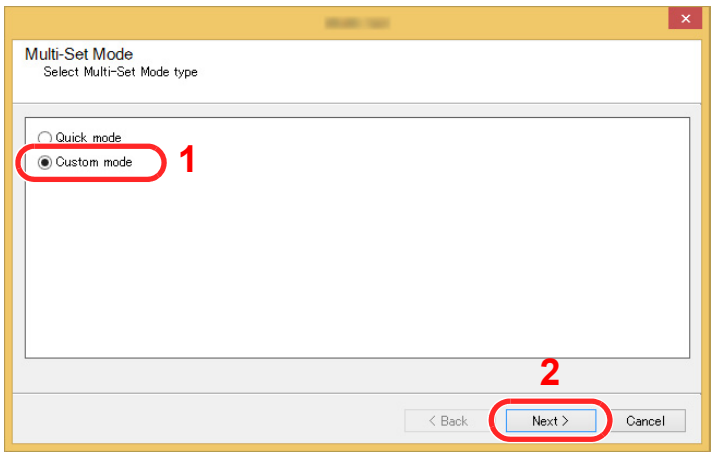

3 Select destination device group and click [**Next**].

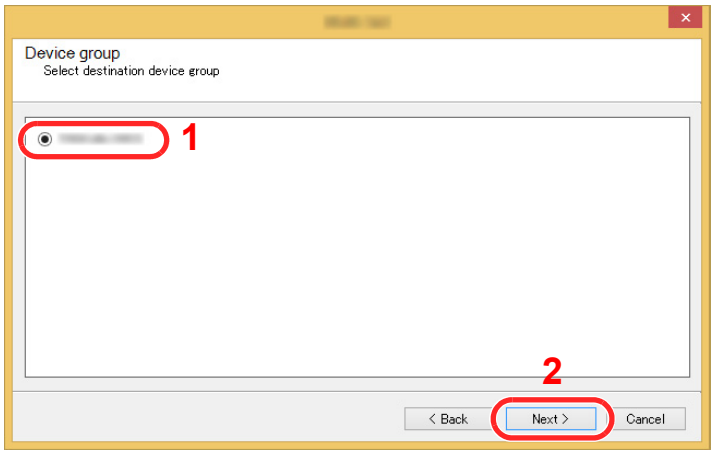

4 Select [**Device Address Book**] and click [**Next**].

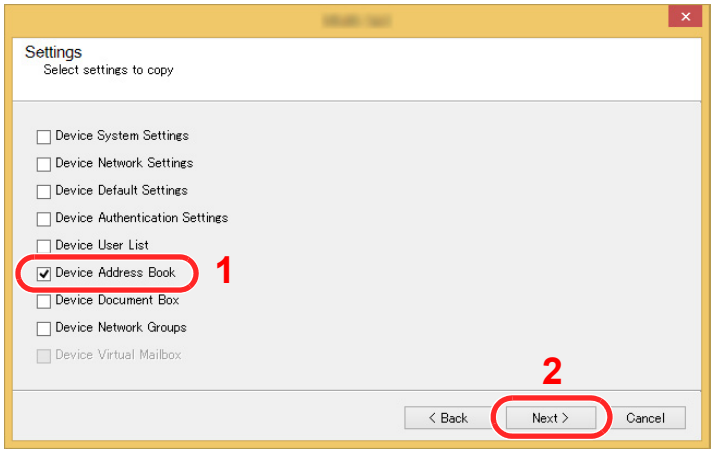

5 Select [**Create from device**] and remove the checkmark from [**Overwrite settings on target device**], and then click [**Next**].

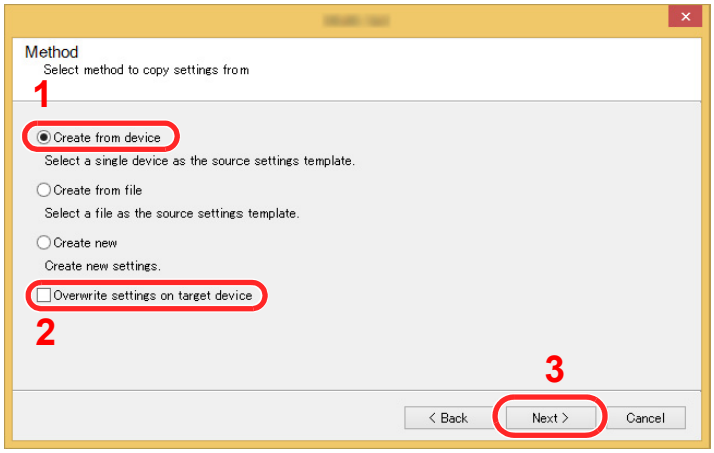

6 Select the model you want to back up, and click [**Next**].

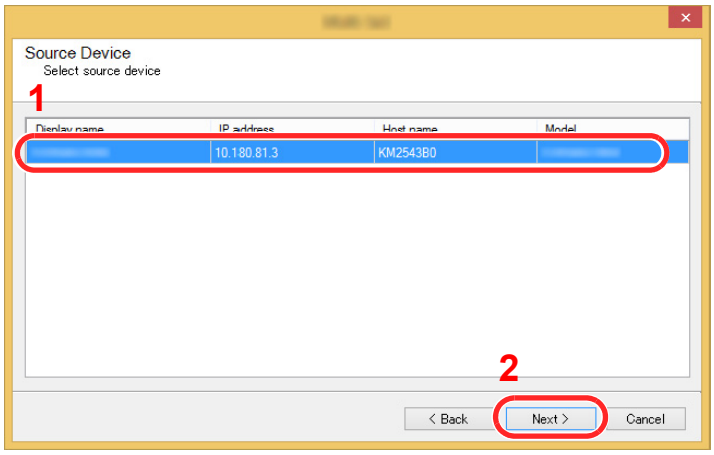

NOTE

If the "Admin Login" screen appears, enter the "Admin Login" and "Login Password", and then click [**OK**]. The default settings are as follows (Upper case and lower case letters are distinguished (case sensitive)).

Login User Name: **Admin**
Login Password: **Admin**

7 Click on [**Save to file**].

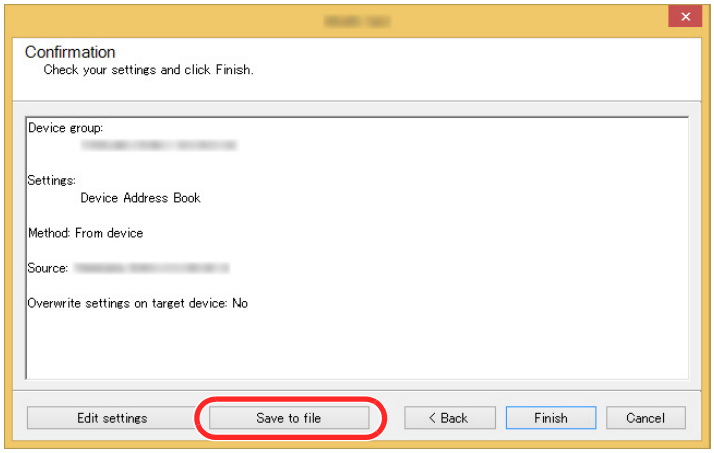

8 Specify the location to save the file, enter the file name, and then click [**Save**].

For "Save as type", make sure to select "XML File".

9 After saving the file, always click [**Cancel**] to close the screen.

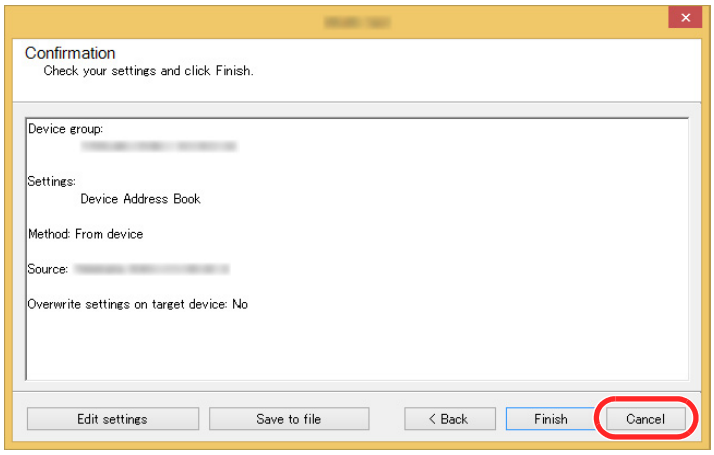

Please note that selecting [**Finish**] will write the data to the machine's Address Book.

Writing Address Book Data to the Machine

1 Launch the KYOCERA Net Viewer.

2 Load the Address Book data.

1 Right-click on the model name to which you want to transfer the Address Book, and select [**Advanced**] - [**Set multiple devices**].

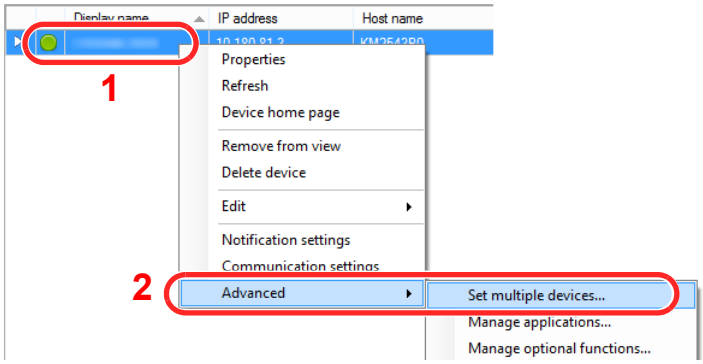

2 Select [**Custom Mode**] and click [**Next**].

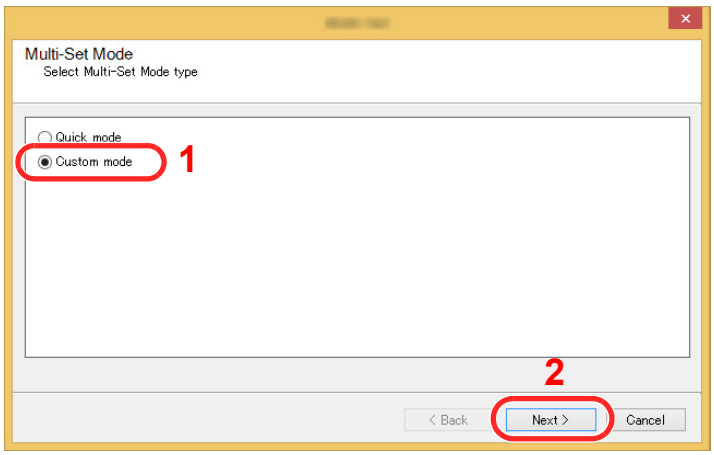

3 Select destination device group and click [**Next**].

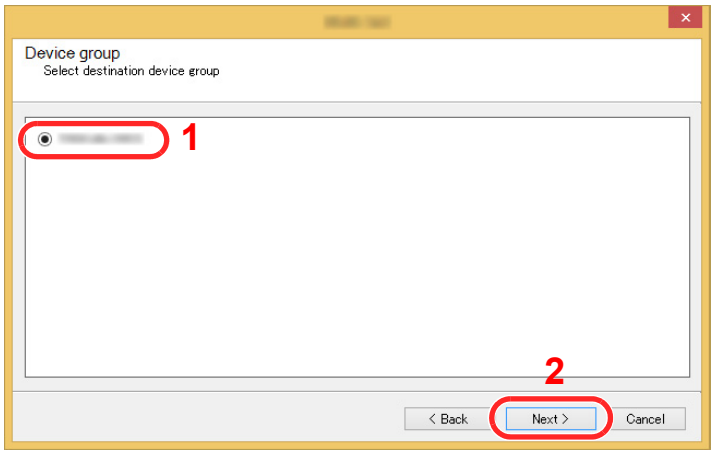

4 Select [**Device Address Book**] and click [**Next**].

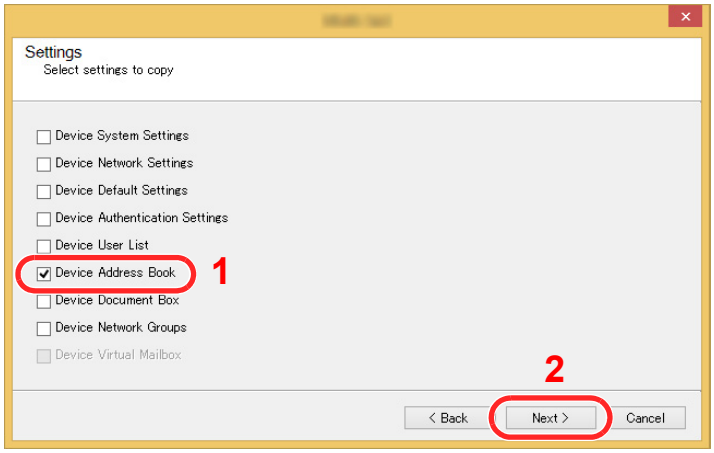

5 Select [**Create from file**] and remove the checkmark from [**Overwrite settings on target device**], and then click [**Next**].

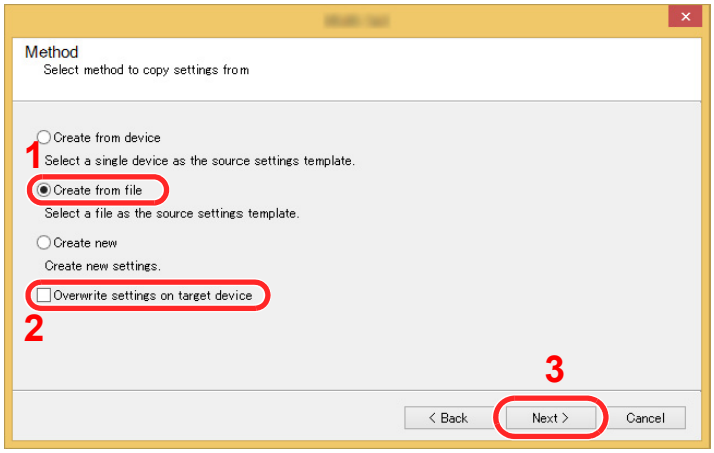

Selecting the [**Overwrite settings on target device**] checkbox will overwrite the machine's Address Book from entry No.1.

6 Click [**Browse**] and select the backup Address Book file, and then click [**Next**].

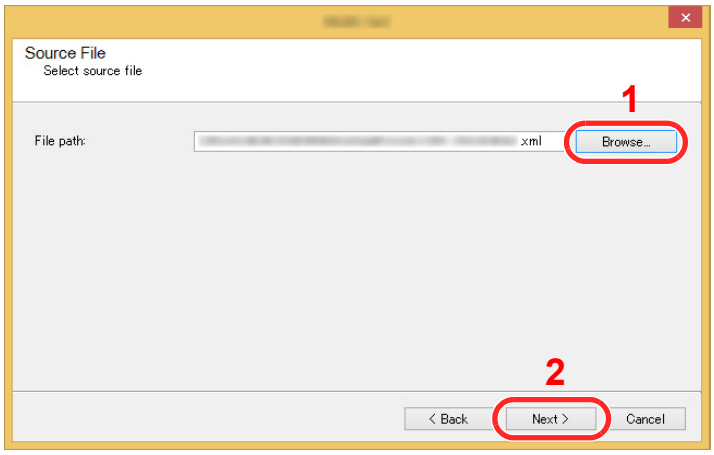

7 Click [**Finish**].

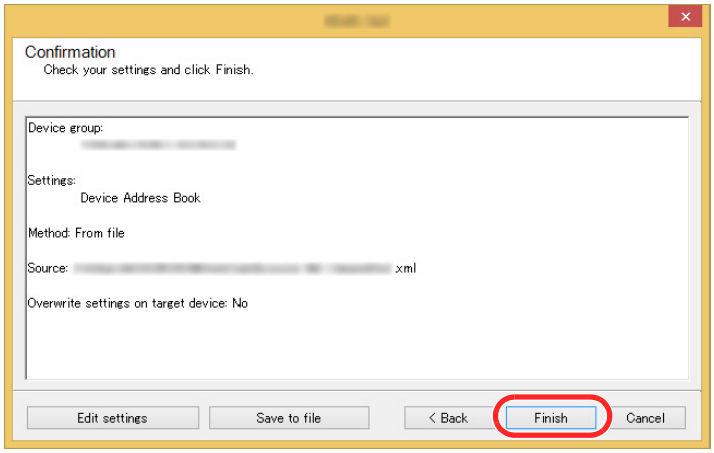

The write process of the Address Book data starts.

8 Once the write process is complete, click [**Close**].

3 Preparation before Use

This chapter explains the following operations.

Loading Paper 3-2
Precaution for Loading Paper 3-2
Selecting the Paper Feeder Units 3-3
Loading in the Cassette 3-4
Precautions for Outputting Paper 3-7
Paper Stopper 3-7
Preparation for Sending a Document to a Shared Folder in a PC 3-8
Making a note of the computer name and full computer name 3-8
Making a note of the user name and domain name 3-9
Creating a Shared Folder, Making a Note of a Shared Folder 3-10
Configuring Windows Firewall 3-13
Registering Destinations in the Address Book 3-18
Adding a Destination (Address Book) 3-18
Adding a Destination on One Touch Key (One Touch Key) 3-25

Loading Paper

Precaution for Loading Paper

When you open a new package of paper, fan the sheets to separate them slightly prior to loading in the following steps.

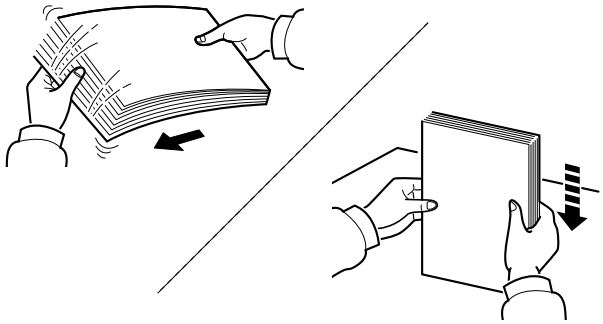

Fan the paper, then tap it on a level surface.

In addition, note the following points.

- If the paper is curled or folded, straighten it before loading. Paper that is curled or folded may cause a jam.
- Avoid exposing opened paper to high humidity as dampness can be a cause of problems. Seal any remaining paper after loading in the multipurpose tray or cassettes back in the paper storage bag.
- If the machine will not be used for a prolonged period, protect all paper from humidity by removing it from the cassettes and sealing it in the paper storage bag.

IMPORTANT

If you copy onto used paper (paper already used for printing), do not use paper that is stapled or clipped together. This may damage the machine or cause poor image quality.

NOTE

If you use special paper such as letterhead, paper with holes or paper with pre-prints like logo or company name, refer to the following:

Paper (page 11-13)

Selecting the Paper Feeder Units

Select the paper feeder units according to the size and type of paper.

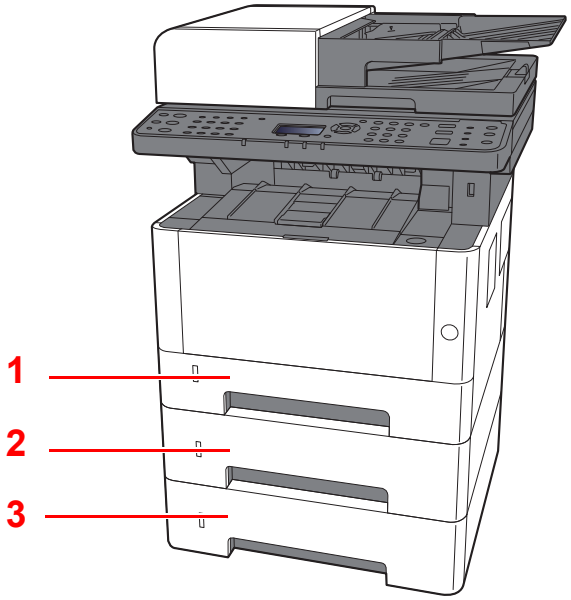

No.	Name	Paper Size	Paper Type	Capacity	Page
1	Cassette 1	A4, B5, A5-R, A5, A6, Legal, Oficio II, Letter, Executive, Statement, Folio, 16K, 216mm×340mm, B5(ISO), Custom	Plain, Preprinted, Bond, Recycled, Vellum, Rough, Letterhead, Color, Prepunched, Thick, High Quality, Custom 1 to 8	250 sheets (80 g/m^2)	page 3-4
2	Cassette 2				
3	Cassette 3				

NOTE

- The number of sheets that can be held varies depending on your environment and paper type.
- You should not use inkjet printer paper or any paper with a special surface coating. (Such paper may cause paper jams or other faults.)

Loading in the Cassette

Load paper in the cassettes. The procedures here represent the cassette 1.

1 Pull the cassette completely out of the machine.

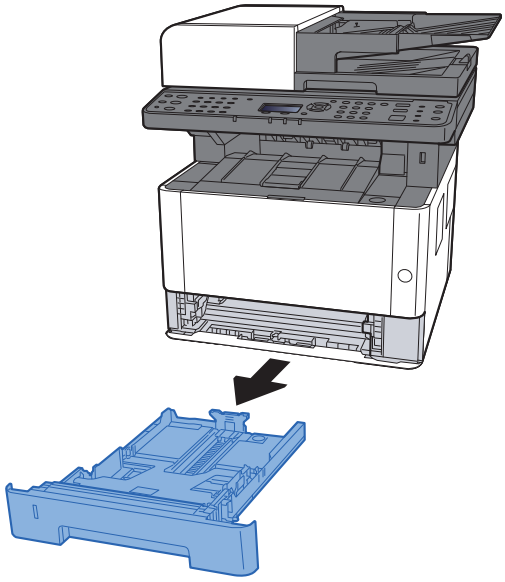

NOTE

If the bottom plate is up, press the bottom plate down until it locks.

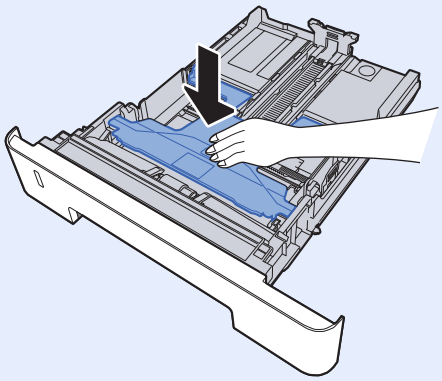

2 Adjust the paper length guide to the paper size required.

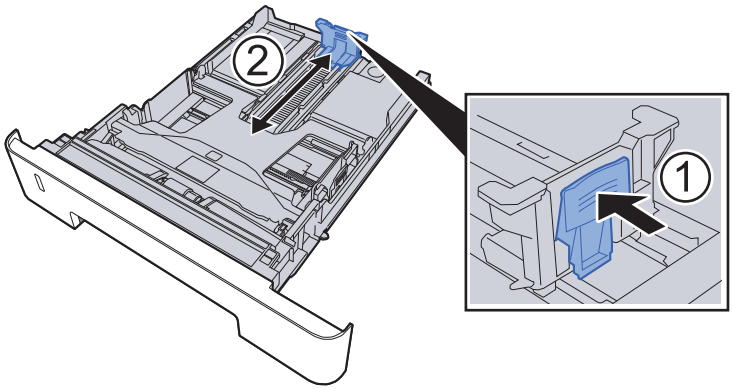

When using Folio, Oficio II or Legal

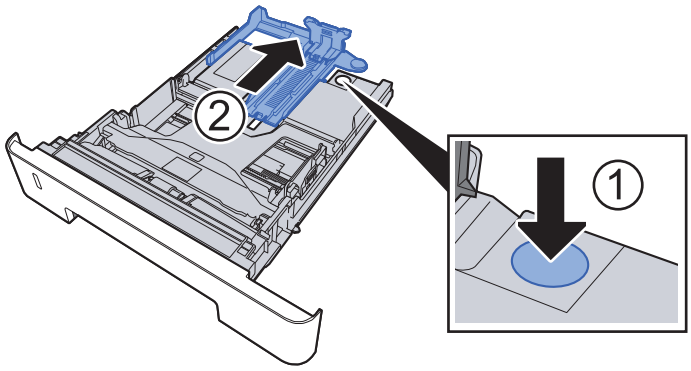

3 Adjust the position of the paper width guides located on the left and right sides of the Cassette.

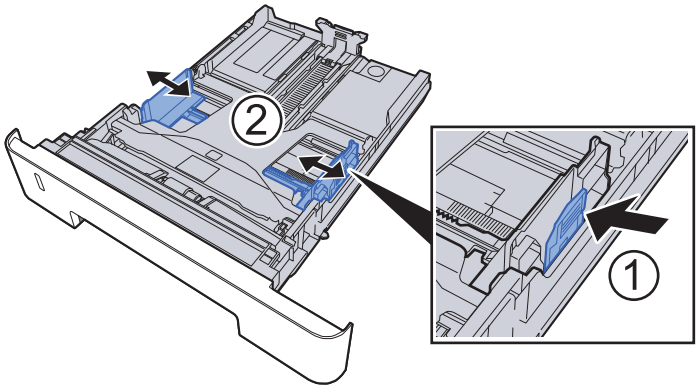

4 Load paper.

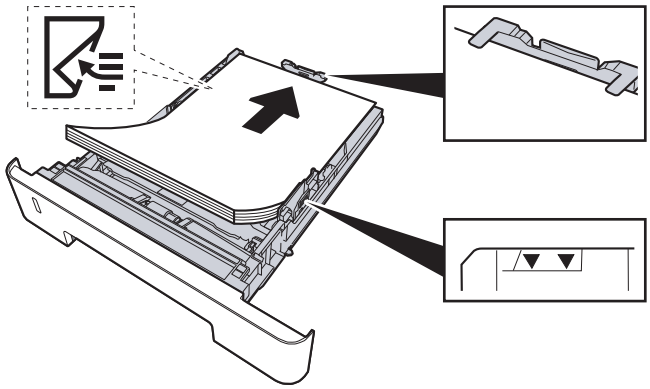

IMPORTANT

- **Load the paper with the print side facing down.**
- **After removing new paper from its packaging, fan the paper before loading it in the multipurpose tray.**

Precaution for Loading Paper (page 3-2)

- **Before loading the paper, be sure that it is not curled or folded. Paper that is curled or folded may cause paper jams.**
- **Ensure that the loaded paper does not exceed the level indicator (see illustration above).**
- **If paper is loaded without adjusting the paper length guide and paper width guide, the paper may skew or become jammed.**

5 Gently push the Cassette 1 back in.

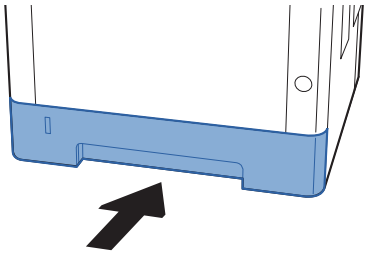

IMPORTANT

Push all cassettes all the way in. Paper jams may result if a cassette is not pushed all the way in.

NOTE

There is a paper gauge on the left side of the front of the cassette to indicate the remaining paper supply.

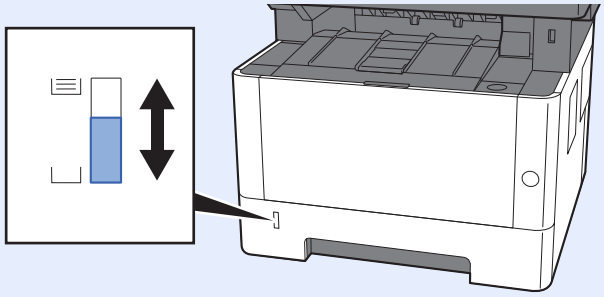

6 Display the screen.

[**System Menu/Counter**] key > [▲] [▼] key > [**Common Settings**] > [**OK**] key > [▲] [▼] key > [**Orig./Paper Set.**] > [**OK**] key > [▲] [▼] key > [**Cassette 1 (to3) Set.**] > [**OK**] key

7 Configure the function.

Select the paper size and paper type.

Cassette 1 (to 3) Set. (page 8-17)

Precautions for Outputting Paper

Paper Stopper

When using paper A4/Letter or larger, open the paper stopper shown in the figure.

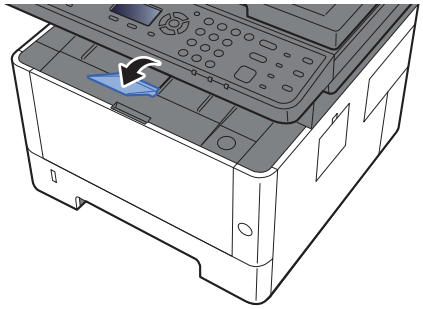

Preparation for Sending a Document to a Shared Folder in a PC

Check the information that needs to be set on the machine and create a folder to receive the document on your computer. Screens of Windows 8.1 are used in the following explanation. The details of the screens will vary in other versions of Windows.

NOTE

Log on to Windows with administrator privileges.

Making a note of the computer name and full computer name

Check the name of the computer name and full computer name.

1 Display the screen.

In Windows 8.1, right-click [**PC**] in the Start screen and select [**Properties**]. Or, right-click the Window icon and select [**System**].

In Windows 8, select the desktop in the Start screen, right-click [**Computer**] from [**Libraries**], and then select [**Properties**].

NOTE

In Windows XP, right-click [**My Computer**] and select [**Properties**]. The [**System Properties**] dialog box appears. Click the [**Computer Name**] tab in the window that appears.

In Windows 7, from [**Start**] button on the Windows, select [**Computer**] and then [**System Properties**].

In Windows 10, right-click [**Start**] button on the Windows and select [**System**].

2 Check the computer name.

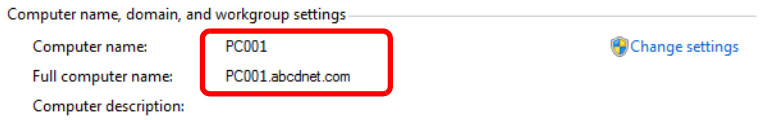

Check the computer name and full computer name.

Screen example:
Computer name: PC001
Full computer name: PC001.abcdnet.com

Windows XP:

If the full computer name does not have a dot (.), the full computer name and the computer name are the same.
If the full computer name has a dot (.), the text string in front of the dot (.) in the full computer name is the computer name.

Example: PC001.abcdnet.com
PC001 is the computer name
PC001.abcdnet.com is the full computer name

After checking the computer name, click the [**Close**] button to close the "**System Properties**" screen.

In Windows XP, after checking the computer name, click the [**Cancel**] button to close the "**System Properties**" screen.

Making a note of the user name and domain name

Check the domain name and user name for logging onto Windows.

1 Display the screen.

Click [**Search**] in charms, and enter "Command Prompt" in the search box. Select [**Command Prompt**] in the search list.

In Windows 7, from [**Start**] button on the Windows, select [**All Programs**] (or [**Programs**]), [**Accessories**] and then [**Command Prompt**].

In Windows 10, right-click [**Start**] button on the Windows and select [**Command Prompt**].

The Command Prompt window appears.

2 Check the domain name and user name.

At the Command Prompt, enter "net config workstation" and then press [**Enter**].

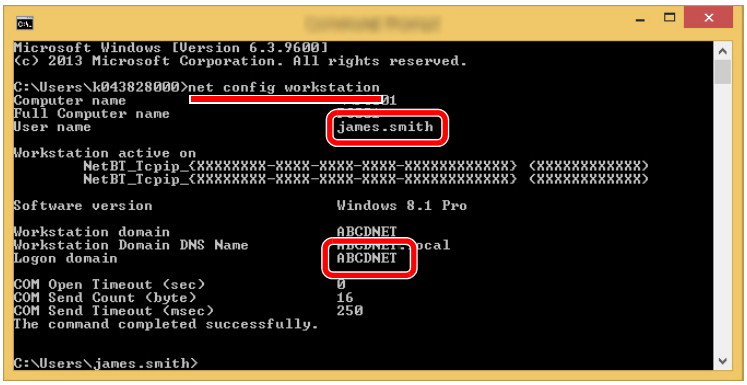

Check the user name and domain name.

Screen example:
User Name: james.smith
Domain Name: ABCDNET

Creating a Shared Folder, Making a Note of a Shared Folder

Create a shared folder to receive the document in the destination computer.

NOTE

If there is a workgroup in System Properties, configure the settings below to limit folder access to a specific user or group.

1 Select [**Settings**] in charms on Desktop, and select [**Control Panel**], [**Appearance and Personalization**], and then [**Folder Options**].

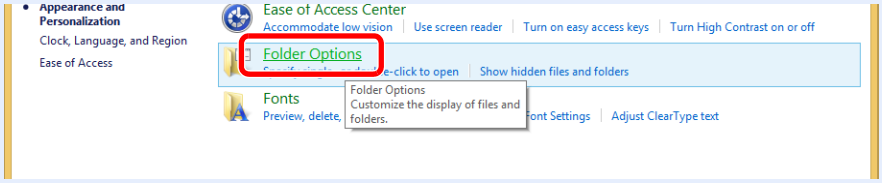

In Windows XP, click [**My Computer**] and select [**Folder Options**] in [**Tools**].

In Windows 7, from [**Start**] button on the Windows, select [**Control Panel**], [**Appearance and Personalization**], and then [**Folder Options**].

In Windows 10, open up a window in File Explorer and select [**View**], [**Options**], and then [**Folder Options**].

2

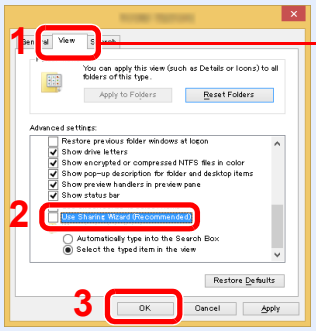

Remove the checkmark from [**Use Sharing Wizard (Recommended)**] in "Advanced settings".

In Windows XP, click the [**View**] tab and remove the checkmark from [**Use Simple File Sharing (Recommended)**] in "Advanced settings".

1 Create a folder.

Create a folder on your computer.

For example, create a folder with the name **"scannerdata"** on the desktop.

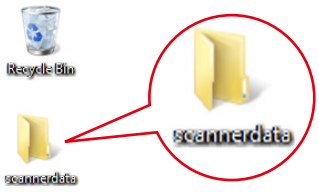

2 Configure permission settings.

1 Right-click the **"scannerdata"** folder, select [**Property**], and click [**Sharing**] and [**Advanced Sharing**].

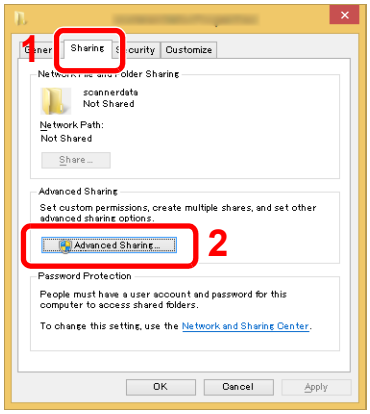

In Windows XP, right-click the "scannerdata" folder and select [**Sharing and Security**] (or [**Sharing**]).

2 Select the [**Share this folder**] checkbox and click the [**Permissions**] button.

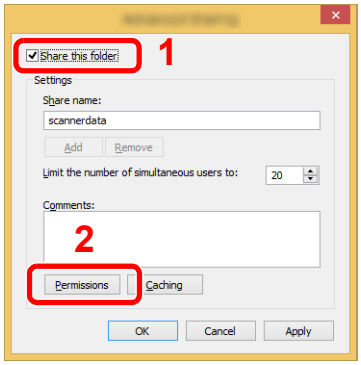

In Windows XP, select [**Share this folder**] and click the [**Permissions**] button.

3 Make a note of the [**Share name**].

4 Click the [**Add**] button.

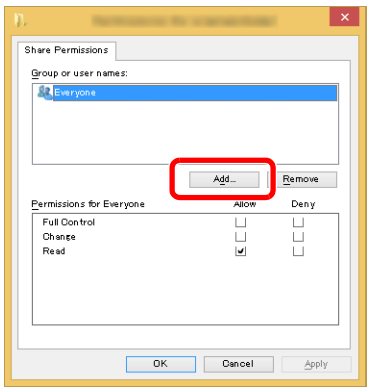

5 Specify the location.

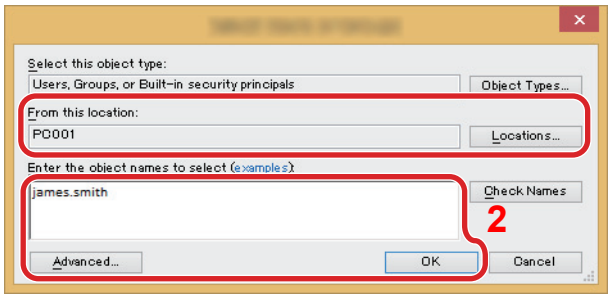

1 If the computer name that you made a note of on page is the same as the domain name:
If the computer name is not shown in "From this location", click the [**Locations**] button, select the computer name, and click the [**OK**] button.
Example: PC001
If the computer name that you made a note of on page is not the same as the domain name:
If the text after the first dot (.) in the full computer name that you made a note of does not appear in "From this location", click the [**Locations**] button, select the text after the dot (.), and click the [**OK**] button.
Example: abcdnet.com
Making a note of the user name and domain name (page 3-9)

2 Enter the user name that you made a note of on page in the text box, and click the [**OK**] button.
Also the user name can be made by clicking the [**Advanced**] button and selecting a user.

6 Set the access permission for the user selected.

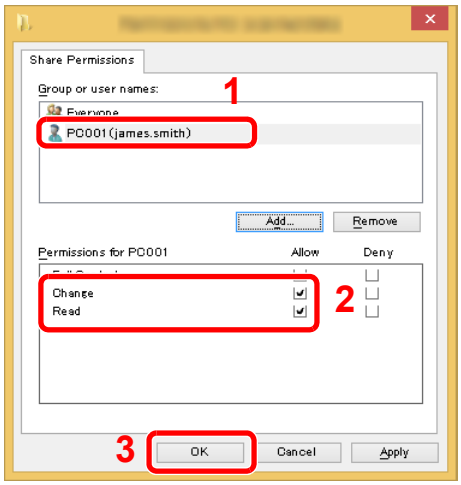

1 Select the user you entered.

2 Select the [**Allow**] checkbox of the "Change" and "Read" permissions

3 Press [**OK**].

In Windows XP, go to step 7.

NOTE

"**Everyone**" gives sharing permission to everyone on the network. To strengthen security, it is recommended that you select "**Everyone**" and remove the "**Read**" [**Allow**] checkmark.

7 Click the [**OK**] button in the "**Advanced Sharing**" screen to close the screen.

8 Check the details set in the [**Security**] tab.

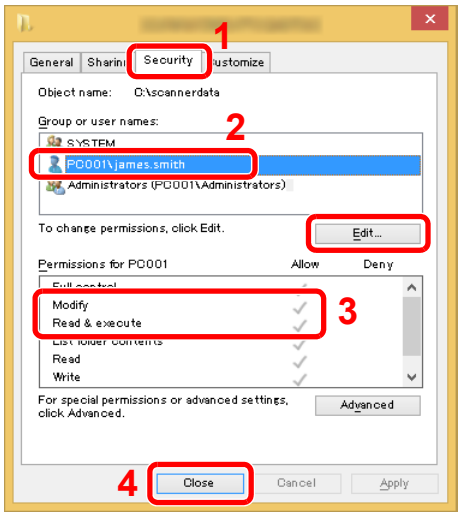

1 Select the [**Security**] tab.

2 Select the user you entered.
If the user does not appear on "Group or user names", click [**Edit**] button to add user in a similar way of "configuration of permission settings".

3 Make sure that checkmarks appear on [**Allow**] checkbox for the "**Modify**" and "**Read & execute**" permissions.

4 Click the [**Close**] button.

In Windows XP, make sure that checkmarks appear on [**Allow**] checkbox for the "**Modify**" and "**Read & execute**" permissions, and click the [**OK**] button.

Configuring Windows Firewall

Permit sharing of files and printers and set the port used for SMB transmission.

NOTE

Log on to Windows with administrator privileges.

1 Check file and printer sharing.

1 In charms on Desktop, click [**Settings**], [**Control Panel**], [**System and Security**], and then [**Windows Firewall**].

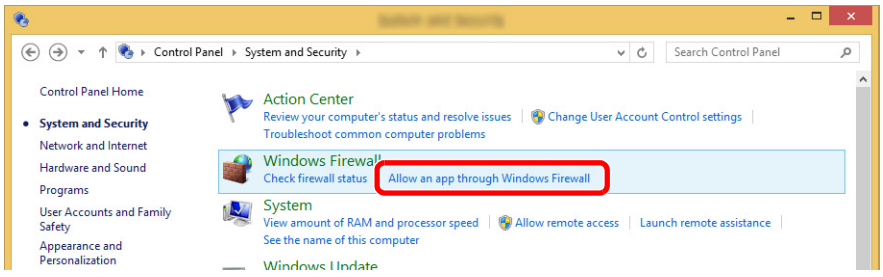

NOTE

If the User Account Control dialog box appears, click the [**Continue**] button.

2 Select the [**File and Printer Sharing**] checkbox.

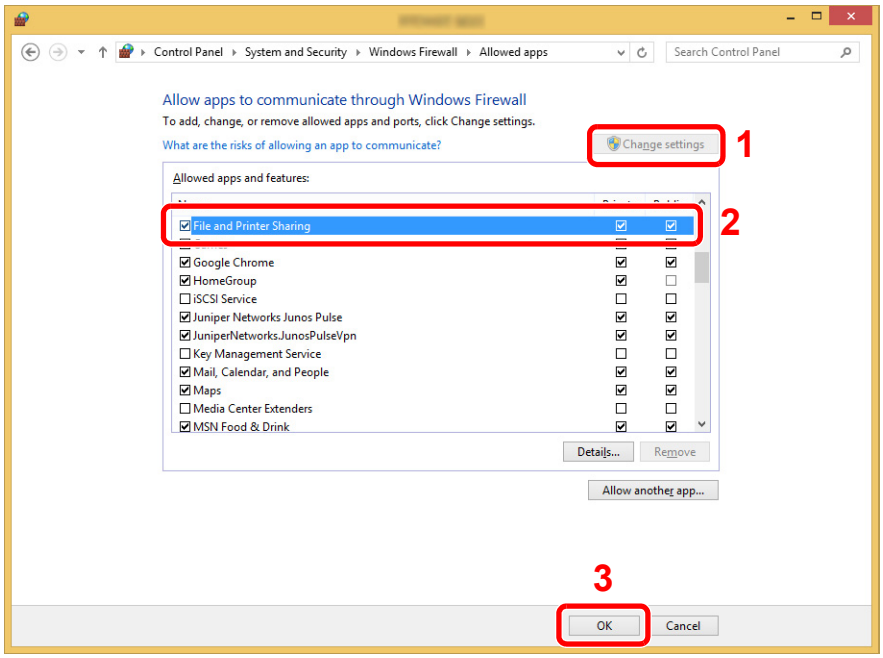

2 Add a port.

1 In charms on Desktop, click [**Settings**], [**Control Panel**], [**System and Security**], and [**Check firewall status**].

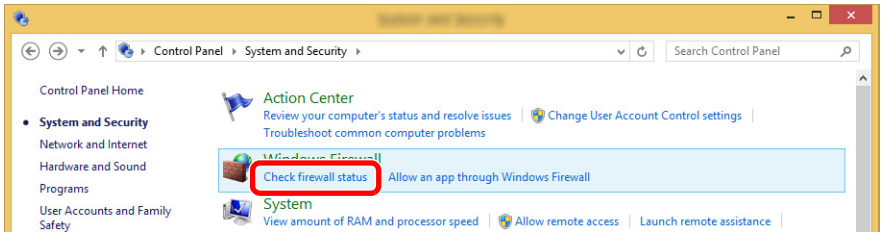

2 Select [**Advanced settings**].

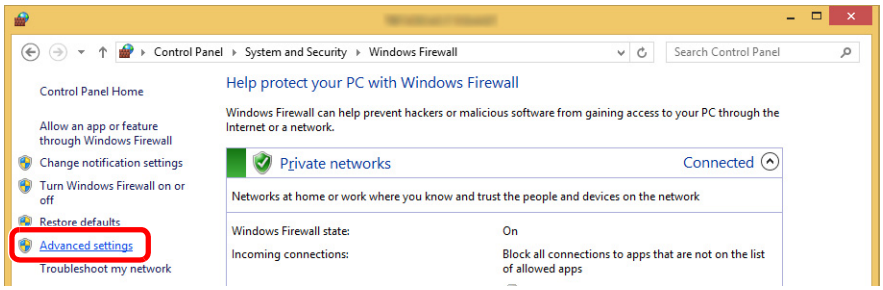

3 Select [**Inbound Rules**].

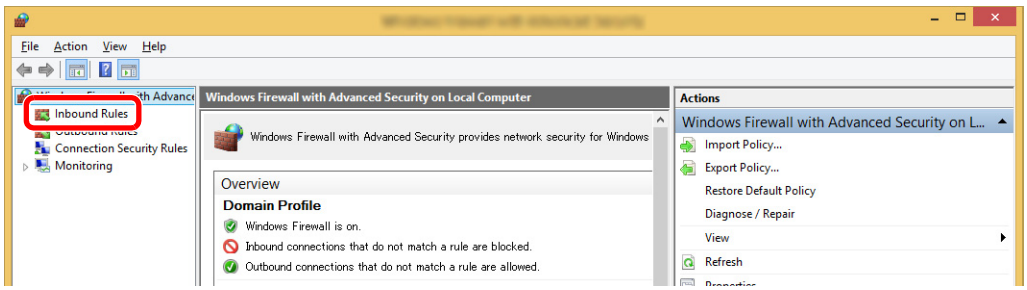

4 Select [**New Rules**].

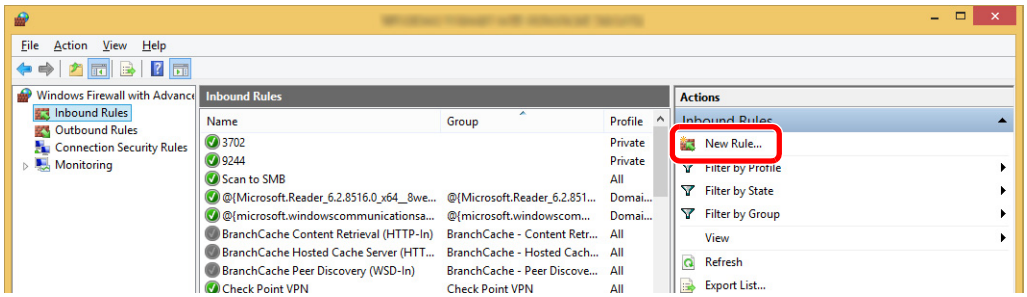

5 Select [**Port**].

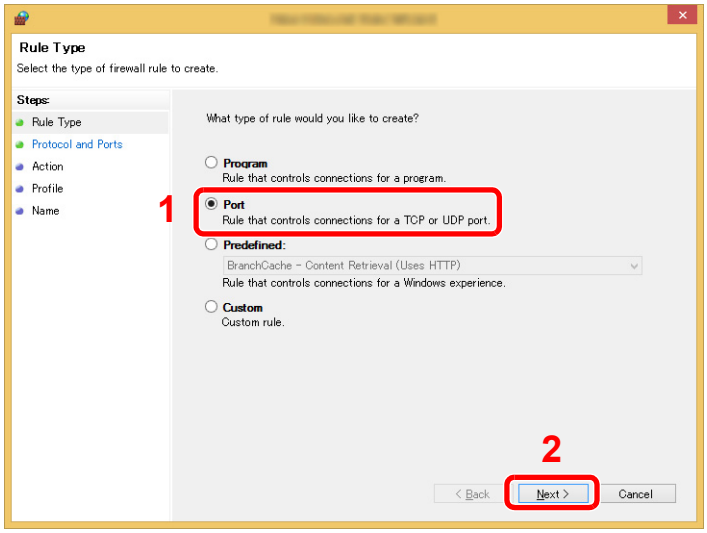

6 Select [**TCP**] as the port to apply the rule to. Then select [**Specific local ports**] and enter "445" then click [**Next**].

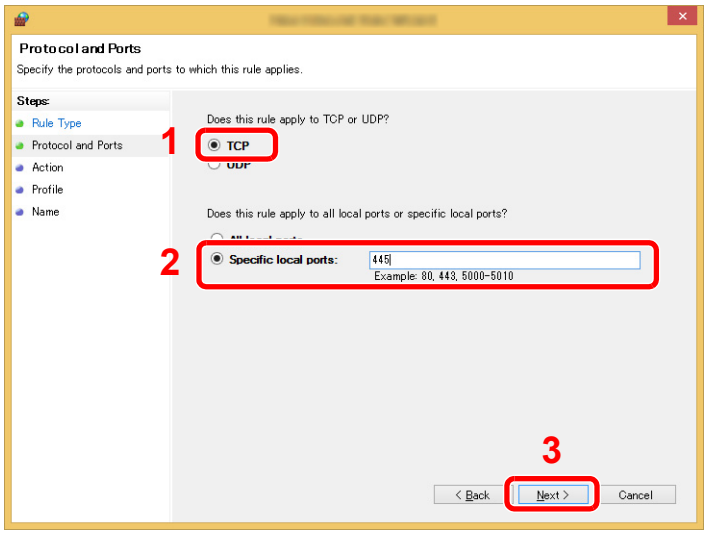

7 Select [**Allow the connection**] and click the [**Next**] button.

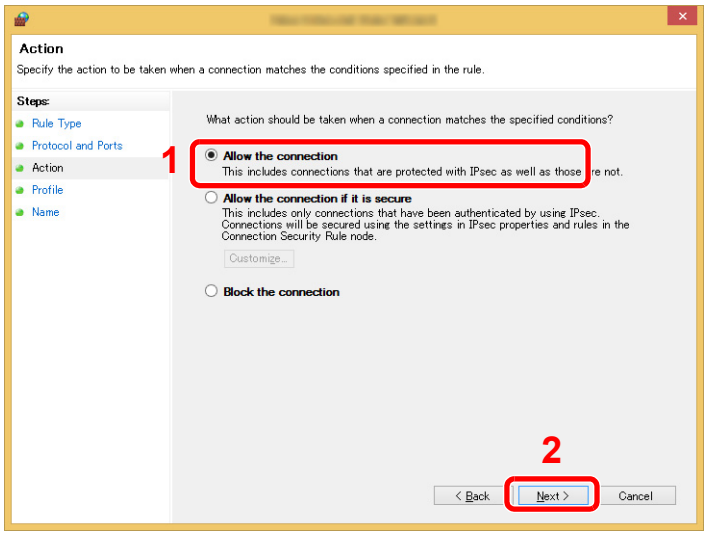

8 Make sure all checkboxes are selected and click the [**Next**] button.

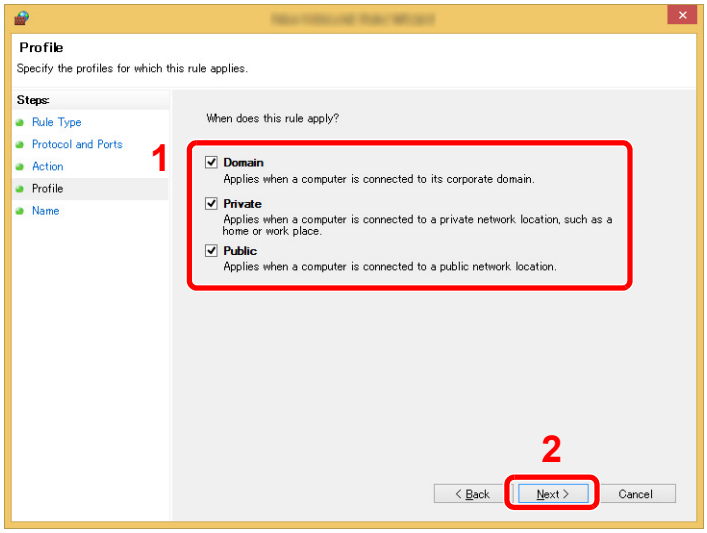

9 Enter **"Scan to SMB"** in "**Name**" and click [**Finish**].

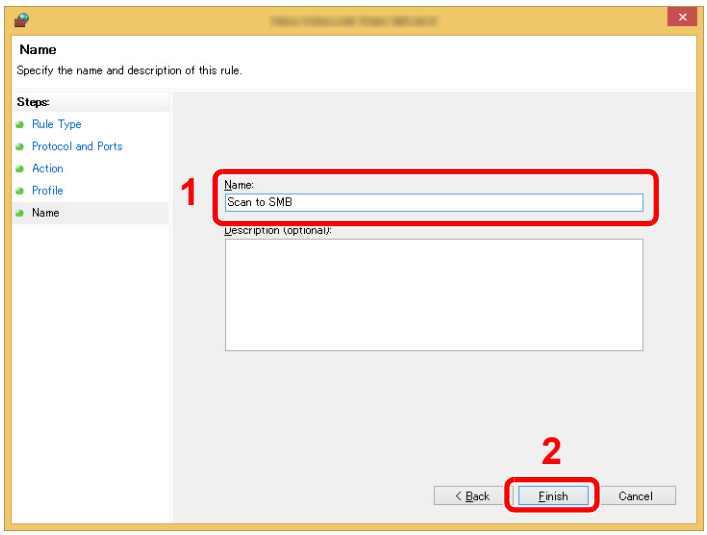

In Windows 7

1 From [**Start**] button on the Windows, select [**Control Panel**], [**System and Security**], and [**Allow a program through Windows Firewall**].
If the User Account Control dialog box appears, click the [**Continue**] button.

2 Configure the settings.

Configuring Windows Firewall (page 3-13)

In Windows XP or Windows Vista

1 In Windows XP, from [**Start**] button on the Windows, select [**Control Panel**], and then [**Windows Firewall**].
In Windows Vista, from [**Start**] button on the Windows, select [**Control Panel**], [**Security**], and then [**Turn Windows Firewall on or off**].
If the User Account Control dialog box appears, click the [**Continue**] button.

2 Click the [**Exceptions**] tab and then the [**Add port...**] button.

3 Specify Add a Port settings.
Enter any name in "**Name**" (example: Scan to SMB). This will be the name of the new port.
Enter "445" in "**Port Number**". Select [**TCP**] for "**Protocol**".

4 Click [**OK**] button.

In Windows 10

1 Right-click [**Start**] button on the Windows and select [**Control Panel**], [**System and Security**], and then [**Allow an app through Windows Firewall**].

If the User Account Control dialog box appears, click the [**Continue**] button.

2 Configure the settings.

Configuring Windows Firewall (page 3-13)

Registering Destinations in the Address Book

Save frequently used destinations to the Address Book or One Touch Keys. The saved destinations can be changed. The destinations are available for Send as E-mail, Send to Folder, and Fax Transmission (Only on products with the fax function installed).

NOTE

Registering and editing of the Address Book can also be done in Command Center RX.

Registering Destinations (page 2-49)

Adding a Destination (Address Book)

Add a new destination to the Address Book. There are two registering methods, contacts and groups. When adding a group, enter the group name and select group members from the Address Book.

NOTE

If user login administration is enabled, you can only edit destinations in the Address Book by logging in with administrator privileges.

Registering a contact address

A maximum of 200 contact addresses can be registered.Each address can include the information such as destination name, E-mail address, FTP server folder path, computer folder path, and FAX No. (Only on products with the fax function installed).

1 Display the screen.

[**System Menu/Counter**] key > [▲] [▼] key > [**Edit Destination**] > [**OK**] key > [▲] [▼] key > [**Address Book**] > [**OK**] key > [**Menu**] > [▲] [▼] key > [**Add Address**] > [**OK**] key > [▲] [▼] key > [**Contact**] > [**OK**] key

2 Add the name.

1 [◄] [►] key > [**Contact Name**] > [**Edit**]

2 Enter the destination name displayed on the Address Book and select the [**OK**] key.

NOTE

Up to 32 characters can be entered.
Refer to the following for details on entering characters.

Character Entry Method (page 11-8)

3 Add the address.

E-mail Address

1 [◄] [►] key > [**E-mailAddress**] > [**Edit**]

2 Enter the E-mail address > [**OK**] key

NOTE

Up to 128 characters can be entered.
Refer to the following for details on entering characters.

Character Entry Method (page 11-8)

The Folder (SMB) Address

1 [◄] [►] key > [**Folder (SMB)**] > [**Edit**]

2 Enter the information for "Host Name (SMB)", "Path", "Login User Name" and "Login Password" > [**OK**] key

NOTE

For the computer name, share name, domain name, and user name, enter the information that you noted when you created the shared folder. For details on creating shared folders, refer to the following:

Preparation for Sending a Document to a Shared Folder in a PC (page 3-8)

The table below explains the items to be entered.

Item	Description	Max. No. of Characters
Host Name (SMB)*1	Computer name	Up to 64 characters
Path	Share name For example: scannerdata If saving in a folder in the shared folder: share name\folder name in shared folder	Up to 128 characters
Login User Name	If the computer name and domain name are the same: User Name For example: james.smith If the computer name and domain name are different: Domain name\User name For example: abcdnet\james.smith	Up to 64 characters
Login Password	Windows logon password (Case sensitive.)	Up to 64 characters

*1 To specify a port number different from the default (445), enter using the format "Host name: port number" (Example: SMBhostname:140).
To enter the IPv6 address, enclose the address in brackets [ ].
(Example: [3ae3:9a0:cd05:b1d2:28a:1fc0:a1:10ae]:140)

NOTE

Refer to the following for details on entering characters.

Character Entry Method (page 11-8)

3 The connection confirmation screen appears. Select [**Yes**] to check the connection and [**No**] to not check it.

"Connected." appears when connection to the destination is correctly established. If "Cannot connect." appears, review the entry.

The Folder (FTP) Address

1 [◄] [►] key > [**Folder (FTP)**] > [**Edit**]

2 Enter the information for "Host Name (FTP)", "Path", "Login User Name" and "Login Password" > [**OK**] key

The table below explains the items to be entered.

Item	Descriptions	Max. No. of Characters
Host Name (FTP)[*1]	Host name or IP address of FTP server	Up to 64 characters
Path[*2]	Path for the file to be stored For example: User\ScanData If no path is entered, the file is stored in the home directory.	Up to 128 characters
Login User Name	FTP server login user name	Up to 64 characters
Login Password	FTP server login password	Up to 64 characters

*1 If you specify a port number other than the default (21), use the "Host name: port number" (Example: FTPhostname:140).
To enter the IPv6 address, enclose the address in brackets [ ].
(Example: [3ae3:9a0:cd05:b1d2:28a:1fc0:a1:10ae]:140)

*2 When the FTP server is based on Linux/UNIX, the path including the sub-folder is combined by the slash "/" not using the back-slash.

NOTE

Refer to the following for details on entering characters.

Character Entry Method (page 11-8)

3 The connection confirmation screen appears. Select [**Yes**] to check the connection and [**No**] to not check it.

If [**SSL**] is enabled in [**Secure Settings**], "Connect with encrypt communication?" will appear after you select [**Yes**]. If [**Yes**] is selected, the FTP encrypted communication connection will be confirmed. If [**No**] is selected, you will return to the regular connection confirmation screen.

"Connected." appears when connection to the destination is correctly established. If "Cannot connect." appears, review the entry.

4 Specify the address number.

1 [◄] [►] key > [**Address Number**] > [**Edit**]

2 Enter an address number.

NOTE

You can set any value between 1 and 250.

Use the numeric keys or select the [▲] or [▼] key to enter a number.

Address Number is an ID for a destination. You can select any available number.

If you specify an address number that is already in use, an error message appears when you select the [**OK**] key and the number cannot be registered.

3 Select the [**OK**] key.

5 Check if the destination entry is correct and select the [OK] key.

The destination is added to the Address Book.

Registering a Group

Compile two or more contacts into a group. Designations in the group can be added at the same time. When adding a group, a maximum of 50 groups can be added in the Address Book.

NOTE
To add a group, you need individually added destinations. Register one or more individual destinations as needed before proceeding. Up to 100 individually registered destinations and a combined total of up to 5 SMB and FTP destination folders can be registered in a single group.

1 Display the screen.

[**System Menu/Counter**] key > [▲] [▼] key > [**Edit Destination**] > [**OK**] key > [▲] [▼] key > [**Address Book**] > [**OK**] key > [**Menu**] > [▲] [▼] key > [**Add Address**] > [**OK**] key > [▲] [▼] key > [**Group**] > [**OK**] key

2 Add the name.

1 [◄] [►] key > [**Group Name**] > [**Edit**]

2 Enter the group name displayed on the Address Book and select the [**OK**] key.

NOTE
Up to 32 characters can be entered.
Refer to the following for details on entering characters.

Character Entry Method (page 11-8)

3 Select the members (destinations).

1 [◄] [►] key > [**Group Member**] > [**Edit**] > [**Menu**] > [▲] [▼] key > [**Add Member**] > [**OK**] key

2 Select the member you want to add, and select the [**OK**] key.

NOTE
Select [**Menu**] and select [**Search(Name)**] to search using a name.

3 Select the destination to be registered in the group from the destinations registered in the contact addresses and select the [**OK**] key.

The selected member is added to group member.

Members can be added by repeating steps 3-1 to 3-3.

4 Select the [**Back**] key.

4 Specify the address number.

1 [◄] [►] key > [**Address Number**] > [**Edit**]

2 Enter an address number.

NOTE

- You can set any value between 1 and 250.
- Use the numeric keys or select the [▲] or [▼] key to enter a number.
- Address Number is an ID for a destination. A free number can be selected.
- If you specify an address number that is already in use, an error message appears when you select the [**OK**] key and the number cannot be registered.

3 Select the [**OK**] key.

5 Select the [OK] key.

The group is added to the Address Book.

Editing Address Book Entries

Edit the destinations (contacts) you added to the Address Book.

1 Display the screen.

[**System Menu/Counter**] key > [▲] [▼] key > [**Edit Destination**] > [**OK**] key > [▲] [▼] key > [**Address Book**] > [**OK**] key

2 Edit the destination.

Editing a Contact

1 Select the destination (contacts) to edit, and select the [**OK**] key.

> **NOTE**
> Select [**Menu**] and select [**Search(Name)**] to search using a name.

2 Change "Contact Name", destination type and address, and "Address Number".

Registering a contact address (page 3-18)

3 After you have completed the changes, [**OK**] key > [**Yes**]

Register the changed destination.

Editing a Group

1 Select the group to edit, and select the [**OK**] key.

2 Change "Group Name" and "Address Number".

Registering a Group (page 3-21)

3 [◄] [►] key > [**Group Member**] > [**Edit**]

4 To delete the destination from the group, select the destination > [**Menu**] > [▲] [▼] key > [**Delete**] > [**OK**] key

> **NOTE**
> Select the destination and select the [**OK**] key to show the detailed information of the destination.

To add the destination, select [**Add Member**].

Registering a Group (page 3-21)

5 Select [**Yes**].

6 After you have completed the changes, [**OK**] key > [**Yes**]

Register the changed group.

Deleting Address Book Entries

Delete the destinations (contacts) you added to the Address Book.

1 Display the screen.

[**System Menu/Counter**] key > [**Address Book/One Touch**] > [**Address Book**]

2 Delete the destination.

Select the destination (contacts) or group to delete, [**Menu**] > [▲] [▼] key > [**Delete**] > [**OK**] key > [**Yes**]

Adding a Destination on One Touch Key (One Touch Key)

Assign a new destination (contact or group) to an one touch key. A maximum of 22 destinations can be registered.

NOTE

- Numbers 1 to 11 are the One Touch Key numbers while the [**Shift Lock**] indicator is switched off. Numbers 12 to 22 are the One Touch Key numbers while the [**Shift Lock**] indicator is switched on by selecting the [**Shift Lock**] key.
- Refer to the following for use of One Touch Key.

Checking and Editing Destinations (page 5-33)

- You can add One Touch keys and change their settings on Command Center RX.

Registering Destinations (page 2-49)

1 Select the One Touch Key to be registered.

1 In the Send or FAX screen, press the One Touch Key that you want to register and hold it (2 seconds or more).

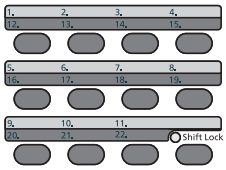

2 [▲] [▼] key > key number > [**OK**] key

Select a One Touch Key number with no registered destination.

2 Select the destinations.

Select the destination to be registered to the One touch key from the destinations registered in the addresses and select the [**OK**] key.

NOTE

Select [**Menu**] and select [**Search(Name)**] to search using a name.

The destination will be added to the One Touch Key.

Editing One Touch Key

1 Select the One Touch Key to edit.

1 Press the One Touch Key to edit and hold it (2 seconds or more).

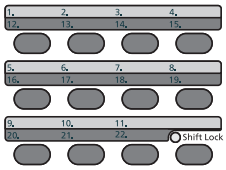

2 [▲] [▼] key > key number > [**OK**] key

When an unregistered One Touch Key number is selected, the Address Book appears. The One Touch Key can be registered by selecting the destination from the Address Book.

2 Edit the destination.

1 [▲] [▼] key > [**Edit**] > [**OK**] key

NOTE

Select [Detail] and select the [**OK**] key to show the detailed information of the destination.

2 Select the new destination, and select the [**OK**] key > [**Yes**]

Register the changed destination.

Deleting One Touch Key

1 Select the One Touch Key to delete.

1 Press the One Touch Key to delete and hold it (2 seconds or more).

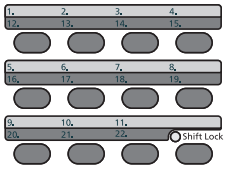

2 [▲] [▼] key > key number > [**OK**] key

When an unregistered One Touch Key number is selected, the Address Book appears. The One Touch Key can be registered by selecting the destination from the Address Book.

2 Delete the destination.

[▲] [▼] key > [**Delete**] > [**OK**] key > [**Yes**]

Deletion of the data registered in the One Touch Key.

4 Printing from PC

This chapter explains the following topics:

Printer Driver Properties Screen 4-2
Displaying the Printer Driver Help 4-3
Changing the Default Printer Driver Settings (Windows 8.1) 4-3
Printing from PC 4-4
Printing on Standard Sized Paper 4-4
Printing on Non-standard Sized Paper 4-6
Canceling Printing from a Computer 4-8
Printing from the Handheld Device 4-9
Printing by AirPrint 4-9
Printing by Google Cloud Print 4-9
Printing by Mopria 4-9
Printing Data Saved in the Printer 4-10
Specifying the Job Box from a Computer and Storing the Job 4-10
Printing Documents from Private Print Box 4-11
Deleting the Documents Stored in the Private Print Box 4-11
Printing Document from Stored Job Box 4-12
Deleting the Documents Stored in the Stored Job Box 4-13
Printing Document from Quick Copy Box 4-14
Deleting the Documents Stored in the Quick Copy Box 4-14
Printing Document from Proof and Hold Box 4-15
Deleting the Documents Stored in the Proof and Hold Box 4-16
Monitoring the Printer Status (Status Monitor) 4-17
Accessing the Status Monitor 4-17
Exiting the Status Monitor 4-17
Quick View State 4-17
Printing Progress Tab 4-18
Paper Tray Status Tab 4-18
Toner Status Tab 4-18
Alert Tab 4-19
Status Monitor Context Menu 4-19
Status Monitor Notification Settings 4-20
Configuration Tool 4-21
Accessing the Configuration Tool 4-21
Exiting the Configuration Tool 4-22
Configuration Tool Settings Screen 4-23

Printer Driver Properties Screen

The printer driver properties screen allows you to configure a variety of print-related settings.

Printer Driver User Guide

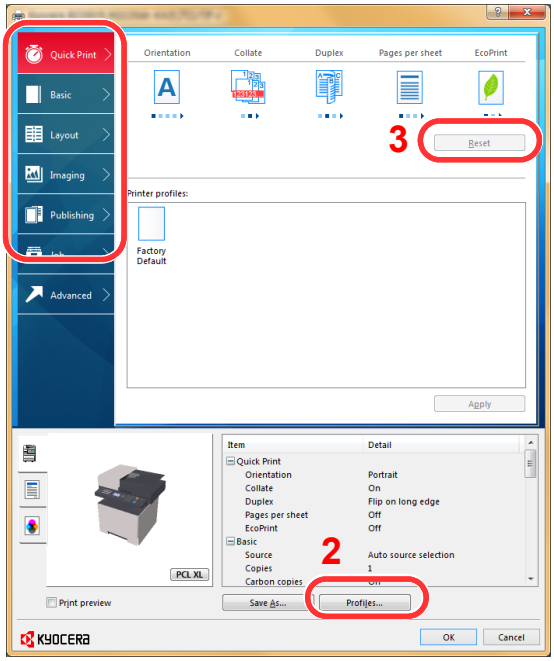

No.	Description
1	**[Quick Print] tab** Provides icons that can be used to easily configure frequently used functions. Each time you click an icon, it changes to an image resembling the print results and applies the settings. 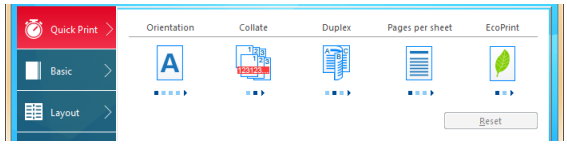 **[Basic] tab** This tab groups basic functions that are frequently used. You can use it to configure the paper size and duplex printing. **[Layout] tab** This tab lets you configure settings for printing various layouts, including booklet printing, combine mode, poster printing, and scaling. **[Imaging] tab** This tab lets you configure settings related to the quality of the print results. **[Publishing] tab** This tab lets you create covers and inserts for print jobs and put inserts between sheets of OHP film. **[Job] tab** This tab lets you configure settings for saving print data from the computer to the machine. Regularly used documents and other data can be saved to the machine for easy printing later. Since saved documents can be printed directly from the machine, this function is also convenient when you wish to print a document that you don't want others to see. **[Advanced] tab** This tab lets you configure settings for adding text pages or watermarks to print data.
2	**[Profiles]** Printer driver settings can be saved as a profile. Saved profiles can be recalled at any time, so it's a convenient practice to save frequently used settings.
3	**[Reset]** Click to revert settings to their initial values.

Displaying the Printer Driver Help

The printer driver includes Help. To learn about print settings, open the printer driver print settings screen and display Help as explained below.

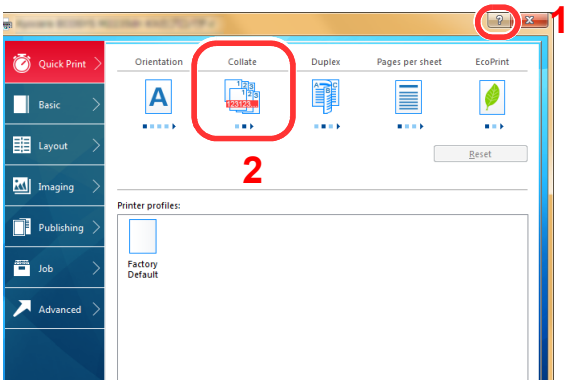

1 Click the [**?**] button in the upper right corner of the screen.

2 Click the item you want to know about.

NOTE

You can also display the printer driver help when you click the desired item and press the [**F1**] key on your keyboard.

Changing the Default Printer Driver Settings (Windows 8.1)

The default printer driver settings can be changed. By selecting frequently used settings, you can omit steps when printing. For the settings, refer to the following:

Printer Driver User Guide

1 In charms on Desktop, click [Settings], [Control Panel], and then [Devices and Printers].

2 Right-click the printer driver icon of the machine, and click the [Printer properties] menu of the printer driver.

3 Click the [Basic] button on the [General] tab.

4 Select the default settings and click the [OK] button.

Printing from PC

This section provides the printing method using the KX DRIVER.

NOTE

- To print the document from applications, install the printer driver on your computer from the supplied DVD (Product Library).
- In some environments, the current settings are displayed at the bottom of the printer driver.

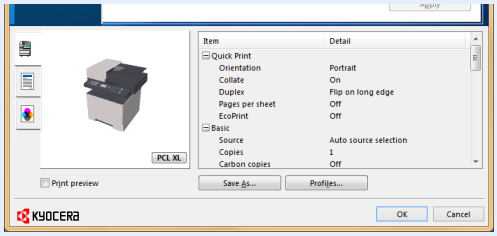

- When printing the cardstock or envelopes, load the cardstock or envelopes in the multipurpose tray before performing the following procedure.

Loading Paper in the Multipurpose Tray (page 5-5)

Printing on Standard Sized Paper

If you loaded a paper size that is included in the print sizes of the machine, select the paper size in the [**Basic**] tab of the print settings screen of the printer driver.

NOTE

Specify the paper size and media type to print from the operation panel.

Orig./Paper Set. (page 8-16)

1 Display the screen.

Click [**File**] and select [**Print**] in the application.

2 Configure the settings.

1 Select the machine from the "Printer" menu and click the [**Properties**] button.

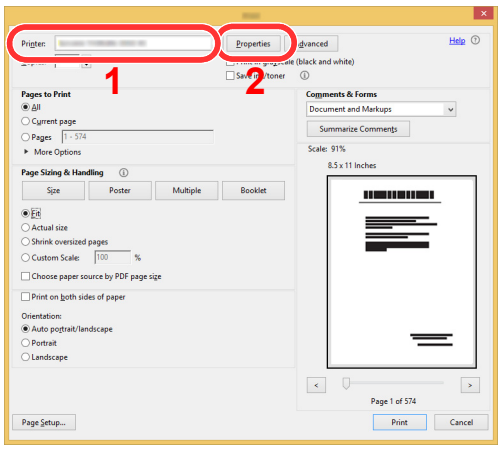

2 Select the [**Basic**] tab.

3 Click "Print size" menu and select the paper size to use for printing.

To load the paper of size that is not included in print sizes of the machine such as cardstock or envelopes, the paper size needs to be registered.

Printing on Non-standard Sized Paper (page 4-6)

To print on the special paper such as thick paper or transparency, click "Media type" menu and select the media type.

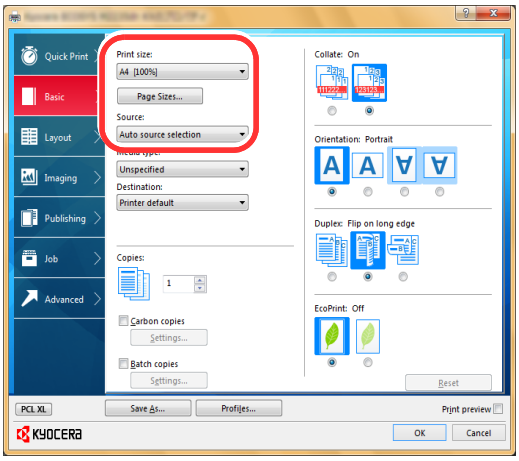

4 Click [**OK**] button to return to the Print dialog box.

3 Start printing.

Click the [**OK**] button.

Printing on Non-standard Sized Paper

If you loaded a paper size that is not included in the print sizes of the machine, register the paper size in the [**Basic**] tab of the print settings screen of the printer driver.

The registered size can be selected from the "Print size" menu.

NOTE

To execute printing at the machine, set the paper size and type in the following:

Orig./Paper Set. (page 8-16)

1 Display the print settings screen.

1 Select [**Settings**] in charms on Desktop, and select [**Control Panel**], and then [**Devices and Printers**].

NOTE

In Windows 8, click [**Start**] button on the Windows, and then click [**Devices and Printers**].

2 Right-click the printer driver icon of the machine, and click the [**Printer properties**] menu of the printer driver.

3 Click the [**Basic**] button on the [**General**] tab.

2 Register the paper size.

1 Click the [**Basic**] tab.

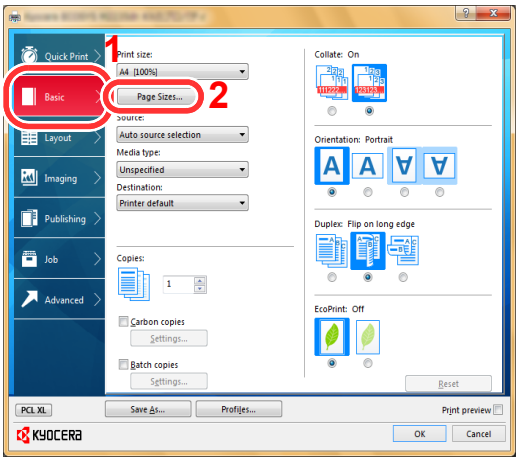

2 Click the [**Page Size...**] button.

3 Click the [**New**] button.

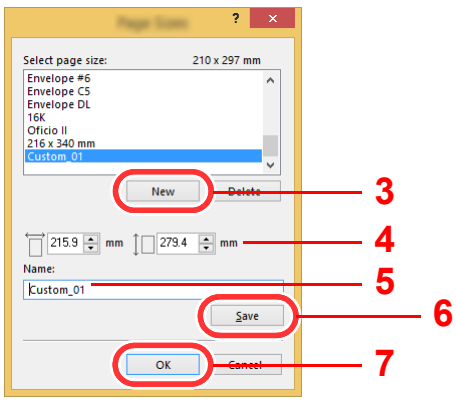

4 Enter the paper size.

5 Enter the name of the paper.

6 Click the [**Save**] button.

7 Click the [**OK**] button.

8 Click the [**OK**] button.

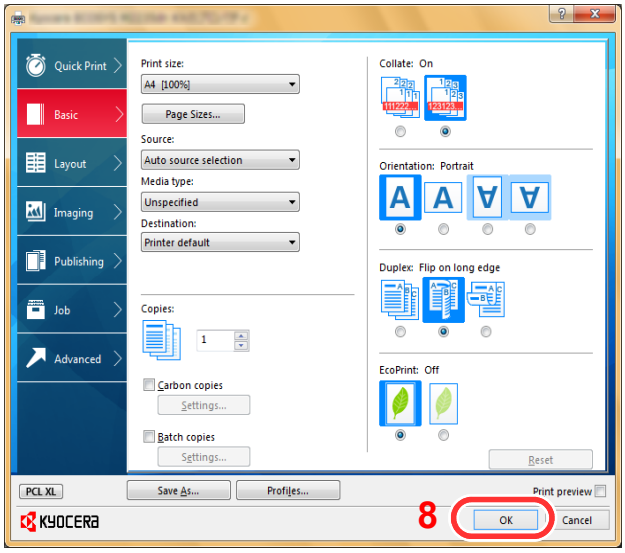

3 Display the screen.

Click [**File**] and select [**Print**] in the application.

4 Select the paper size and type of non-standard size paper.

1 Select the machine from the "Printer" menu and click the [**Properties**] button.

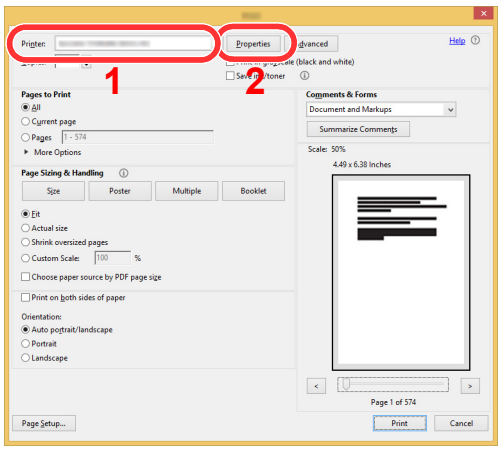

2 Select the [**Basic**] tab.

3 Click "Print size" menu and select the paper size registered in step 2.

To print on the special paper such as thick paper or transparency, click "Media type" menu and select the media type.

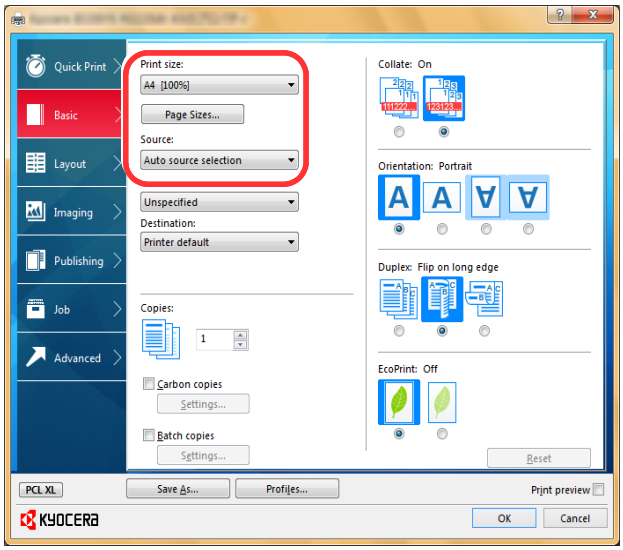

NOTE

If you loaded a postcard or envelope, select [**Cardstock**] or [**Envelope**] in the "Media type" menu.

4 Select the paper source in the "Source" menu.

5 Click [**OK**] button to return to the Print dialog box.

5 Start printing.

Click the [**OK**] button.

Canceling Printing from a Computer

To cancel a print job executed using the printer driver before the printer begins printing, do the following:

NOTE

When canceling printing from this machine, refer to the following:

Canceling Jobs (page 5-13)

1 Double-click the printer icon ( ) displayed on the taskbar at the bottom right of the Windows desktop to display a dialog box for the printer.

2 Click the file for which you wish to cancel printing and select [Cancel] from the "Document" menu.

Printing from the Handheld Device

This machine supports the AirPrint, Google Cloud Print and Mopria.

According to the supported OS and application, you can print the job from any handheld device or computer without installing a printer driver.

Printing by AirPrint

AirPrint is a printing function that is included standard in iOS 4.2 and later products, and Mac OS X 10.7 and later products.

To use the AirPrint, make sure that the AirPrint setting is enabled in the Command Center RX.

Command Center RX User Guide



Printing by Google Cloud Print

Google Cloud Print is a printing service provided by Google. This service enables a user with a Google account to print from a machine connected to the Internet.

The machine can be configured in the Command Center RX.

Command Center RX User Guide

NOTE

A Google account is necessary to use Google Cloud Print. Obtain a Google account if you do not have one.

It is also necessary to register the machine with the Google Cloud Print service in advance. The machine can be registered from a PC connected to the same network.

Printing by Mopria

Mopria is a standard on printing function included in Android 4.4 or later products. Mopria Print Service needs to be installed and enabled in advance.

For details on how to use, refer to a Web site of Mopria Alliance.

Printing Data Saved in the Printer

You can save the print job into the Job Box of this device and print it as necessary. To use the Stored Job Box and the Quick Copy Box, an SD/SDHC memory card must be installed in the device.

IMPORTANT

Unencrypted data is saved on the SD/SDHC memory card.

Exercise caution when saving sensitive documents.

NOTE

- To use the Private Print Box and the Proof and Hold Box, [**RAM Disk Mode**] must be [**On**].

RAM Disk Mode (page 8-26)

- If you are using an SD/SDHC memory card to use a Job Box, set [**RAM Disk Mode**] to [**Off**].

If you configure settings in the [**Job**] tab of the printer driver and then print, the print job will be saved in the Job Box (memory) and printing can be executed at the machine.

Follow the work flow below when using Job Box.

Specifying the Job Box from a computer and sending the print job. (page 4-10)

▼

Using the operation panel to specify a file within a Box and printing it.

You can print the documents from the following boxes.

Printing Documents from Private Print Box (page 4-11)

Printing Document from Stored Job Box (page 4-12)

Printing Document from Quick Copy Box (page 4-14)

Printing Document from Proof and Hold Box (page 4-15)

Specifying the Job Box from a Computer and Storing the Job

1 Click [File] and select [Print] in the application.

The Print dialog box displays.

2 Select the machine from the "Name" menu.

3 Click the [Properties] button.

The Properties dialog box displays.

4 Click the [Job] tab and select the [Job storage (e-MPS)] check box to set the function.

NOTE

For information on how to use the printer driver software, refer to the following:

Printer Driver User Guide

Printing Documents from Private Print Box

In Private Printing, you can specify that a job is not to be printed until you operate the machine. When sending the job from the application software, specify a 4-digit access code in the printer driver. The job is released for printing by entering the access code on the operation panel, ensuring confidentiality of the print job. The data will be deleted upon completion of the print job or after the power switch is turned off.

1 Display the screen.

1 [**Document Box/USB**] key > [▲] [▼] key > [**Job Box**] > [**OK**] key > [▲] [▼] key > [**Private/Stored**] > [**OK**] key

2 Select the creator of the document, and select the [**OK**] key.

2 Print the document.

1 Select the document to print, and [**Select**] > [**OK**] key.

The file is selected. A checkmark will be placed on the right of the selected file.

Select the checkmarked file and select [**Select**] again to cancel the selection.

NOTE

Select [**Menu**] to perform the following operations.

- [**Select All**]: Select all files.
- [**Clear All**]: Cancel all the file selections.
- [**Detail**]: Display the details for the selected document.

2 [▲] [▼] key > [**Print**] > [**OK**] key

3 Enter the access code.

4 Specify the number of copies to print as desired, and the [**OK**] key > [**Yes**].

Printing starts.

Upon completion of printing, the Private Print job is automatically deleted.

Deleting the Documents Stored in the Private Print Box

1 Display the screen.

1 [**Document Box/USB**] key > [▲] [▼] key > [**Job Box**] > [**OK**] key > [▲] [▼] key > [**Private/Stored**] > [**OK**] key

2 Select the creator of the document, and select the [**OK**] key.

2 Delete the document.

1 Select the document to delete, and [**Select**] > [**OK**] key.

The file is selected. A checkmark will be placed on the right of the selected file.

Select the checkmarked file and select [**Select**] again to cancel the selection.

NOTE

Select [**Menu**] to perform the following operations.

- [**Select All**]: Select all files.
- [**Clear All**]: Cancel all the file selections.
- [**Detail**]: Display the details for the selected document.

2 [▲] [▼] key > [**Delete**] > [**OK**] key > Enter the access code > [**OK**] key > [**Yes**]

The document is deleted.

Printing Document from Stored Job Box

In Stored Job, the print data sent from the application is saved to the machine. You can set up an access code as necessary. If you set up an access code, enter the access code when printing. Print data will be stored in the Stored Job Box after printing. This will allow printing of the same print data repeatedly.

1 Display the screen.

1 [**Document Box/USB**] key > [▲] [▼] key > [**Job Box**] > [**OK**] key > [▲] [▼] key > [**Private/Stored**] > [**OK**] key

2 Select the creator of the document, and select the [**OK**] key.

2 Print the document.

1 Select the document to print, and [**Select**] > [**OK**] key.

The file is selected. A checkmark will be placed on the right of the selected file.

Select the checkmarked file and select [**Select**] again to cancel the selection.

NOTE

Select [**Menu**] to perform the following operations.

- [**Select All**]: Select all files.
- [**Clear All**]: Cancel all the file selections.
- [**Detail**]: Display the details for the selected document.

2 [▲] [▼] key > [**Print**] > [**OK**] key

3 Specify the number of copies to print as desired, and the [**OK**] key > [**Yes**].

Printing starts.

NOTE

If the document is protected by an access code, the password entry screen will be displayed. Enter the password using the numeric keys.

Deleting the Documents Stored in the Stored Job Box

1 Display the screen.

1 [**Document Box/USB**] key > [▲] [▼] key > [**Job Box**] > [**OK**] key > [▲] [▼] key > [**Private/Stored**] > [**OK**] key

2 Select the creator of the document, and select the [**OK**] key.

2 Print and delete the document.

1 Select the document to delete, and [**Select**] > [**OK**] key.

The file is selected. A checkmark will be placed on the right of the selected file.

Select the checkmarked file and select [**Select**] again to cancel the selection.

NOTE

Select [**Menu**] to perform the following operations.

- [**Select All**]: Select all files.
- [**Clear All**]: Cancel all the file selections.
- [**Detail**]: Display the details for the selected document.

2 [▲] [▼] key > [**Delete**] > [**OK**] key > [**Yes**]

The document is deleted.

NOTE

If the document is protected by an access code, the password entry screen will be displayed. Enter the password using the numeric keys.

Printing Document from Quick Copy Box

Quick Copy feature facilitates additional prints of a document already printed. Activating Quick Copy and printing a document using the printer driver allow the print data to be stored in the Quick Copy Job Box. When additional copies are required, you can reprint the required number of copies from the operation panel. By default, up to 32 documents can be stored. When power is turned off, all stored jobs will be deleted.

NOTE

- When the number of jobs reaches the limit, the oldest job will be overwritten by the new one.
- To maintain free space on the box, you can set the maximum number of stored jobs.

Quick Copy Jobs (page 8-32)

1 Display the screen.

1 [**Document Box/USB**] key > [▲] [▼] key > [**Job Box**] > [**OK**] key > [▲] [▼] key > [**Quick/Proof**] > [**OK**] key

2 Select the creator of the document, and select the [**OK**] key.

2 Print the document.

1 Select the document to print, and [**Select**] > [**OK**] key.

The file is selected. A checkmark will be placed on the right of the selected file.

Select the checkmarked file and select [**Select**] again to cancel the selection.

NOTE

Select [**Menu**] to perform the following operations.

- [**Select All**]: Select all files.
- [**Clear All**]: Cancel all the file selections.
- [**Detail**]: Display the details for the selected document.

2 [▲] [▼] key > [**Print**] > [**OK**] key

3 Specify the number of copies to print as desired, and the [**OK**] key > [**Yes**].

Printing starts.

Deleting the Documents Stored in the Quick Copy Box

1 Display the screen.

1 [**Document Box/USB**] key > [▲] [▼] key > [**Job Box**] > [**OK**] key > [▲] [▼] key > [**Quick/Proof**] > [**OK**] key

2 Select the creator of the document, and select the [**OK**] key.

2 Delete the document.

1 Select the document to delete, and [**Select**] > [**OK**] key.

The file is selected. A checkmark will be placed on the right of the selected file.

Select the checkmarked file and select [**Select**] again to cancel the selection.

NOTE

Select [**Menu**] to perform the following operations.

- [**Select All**]: Select all files.
- [**Clear All**]: Cancel all the file selections.
- [**Detail**]: Display the details for the selected document.

2 [▲] [▼] key > [**Delete**] > [**OK**] key > [**Yes**]

The document is deleted.

Printing Document from Proof and Hold Box

The Proof and Hold feature produces only a single proof print of multiple-print job and holds printing of the remaining copies. Printing a multiple-print job in Proof and Hold using the printer driver allows only a single copy to be printed while maintaining the document data in the Job Box. To continue to print the remaining copies, use the operation panel. You can change the number of copies to print.

1 Display the screen.

1 [**Document Box/USB**] key > [▲] [▼] key > [**Job Box**] > [**OK**] key > [▲] [▼] key > [**Quick/Proof**] > [**OK**] key

2 Select the creator of the document, and select the [**OK**] key.

2 Print the document.

1 Select the document to print, and [**Select**] > [**OK**] key.

The file is selected. A checkmark will be placed on the right of the selected file.

Select the checkmarked file and select [**Select**] again to cancel the selection.

NOTE

Select [**Menu**] to perform the following operations.

- [**Select All**]: Select all files.
- [**Clear All**]: Cancel all the file selections.
- [**Detail**]: Display the details for the selected document.

2 [▲] [▼] key > [**Print**] > [**OK**] key

3 Specify the number of copies to print as desired, and the [**OK**] key > [**Yes**].

Printing starts.

Deleting the Documents Stored in the Proof and Hold Box

1 Display the screen.

1 [**Document Box/USB**] key > [▲] [▼] key > [**Job Box**] > [**OK**] key > [▲] [▼] key > [**Quick/Proof**] > [**OK**] key

2 Select the creator of the document, and select the [**OK**] key.

2 Delete the document.

1 Select the document to delete, and [**Select**] > [**OK**] key.

The file is selected. A checkmark will be placed on the right of the selected file.

Select the checkmarked file and select [**Select**] again to cancel the selection.

NOTE

Select [**Menu**] to perform the following operations.

- [**Select All**]: Select all files.
- [**Clear All**]: Cancel all the file selections.
- [**Detail**]: Display the details for the selected document.

2 [▲] [▼] key > [**Delete**] > [**OK**] key > [**Yes**]

The document is deleted.

Monitoring the Printer Status (Status Monitor)

The Status Monitor monitors the machine status and provides an ongoing reporting function.

NOTE

When you activate Status Monitor, check the status below.

- KX DRIVER is installed.
- Either [**Enhanced WSD**] or [**EnhancedWSD(SSL)**] is enabled.

Network Setting (page 8-7)

Accessing the Status Monitor

The Status Monitor also starts up when printing is started.

Exiting the Status Monitor

Use either of the methods listed below to exit the Status Monitor.

- Exit manually:
  Click the settings icon and select Exit in the menu to exit the Status Monitor.
- Exit automatically:
  The Status Monitor automatically shuts down after 7 minutes if it is not being used.

Quick View State

The status of the machine is displayed using icons. Detailed information is displayed when the Expand button is clicked.

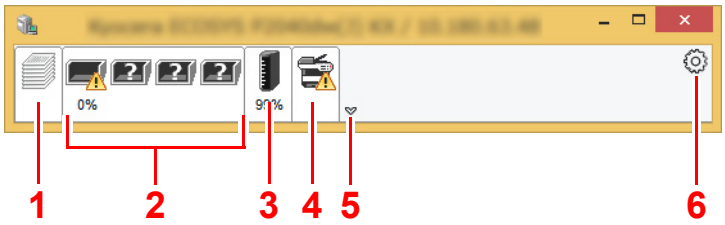

1 Printing Progress Tab
2 Paper Tray Status Tab
3 Toner Status Tab
4 Alert Tab
5 Expand button
6 Settings icon

Detailed information is displayed by clicking on each icon tab.

Printing Progress Tab

The status of the print jobs is displayed.

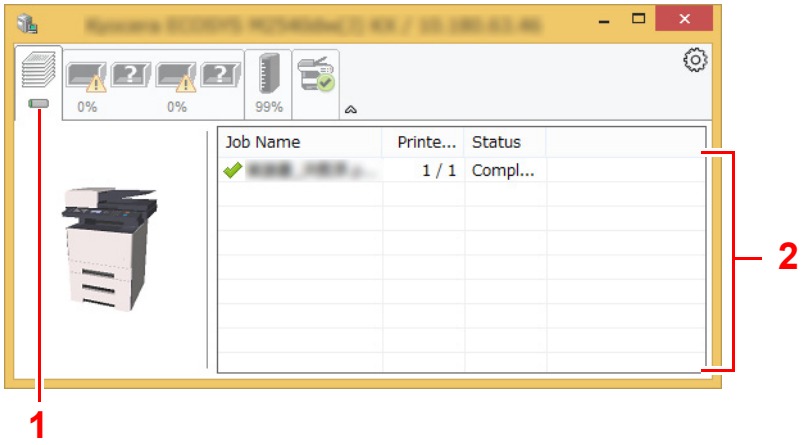

1 Status icon

2 Job list

Select a job on the job list and it can be canceled using the menu displayed with a right-click.

Paper Tray Status Tab

Information is displayed about the paper in the printer and about the amount of paper remaining.

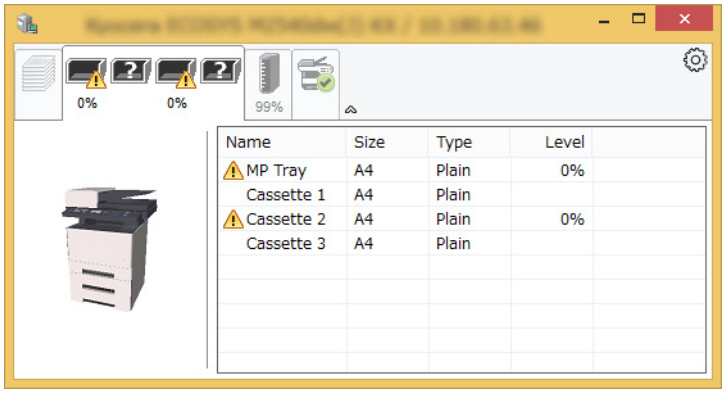

Toner Status Tab

The amount of toner remaining is displayed.

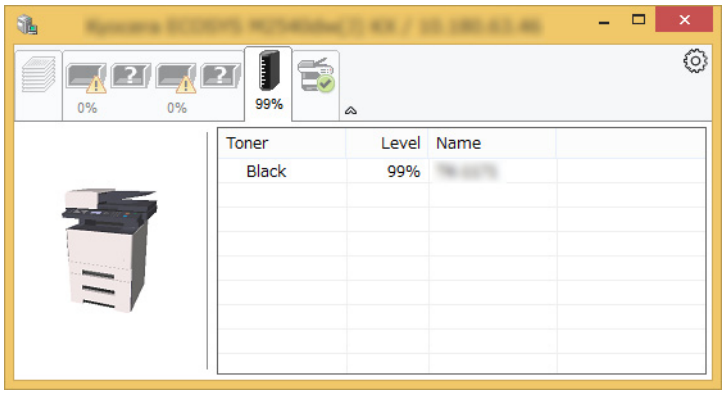

Alert Tab

If an error occurs, a notice is displayed using a 3D image and a message.

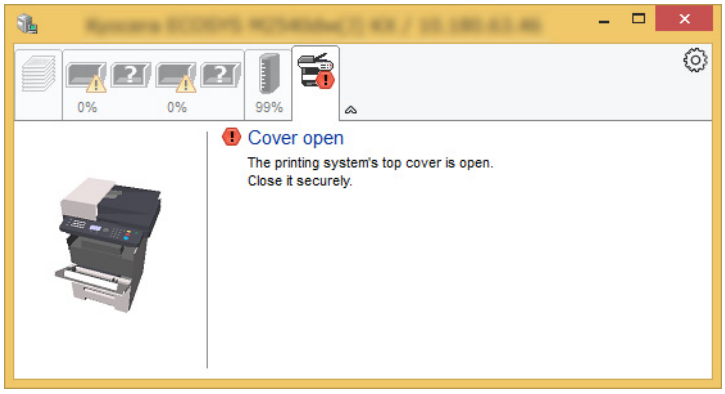

Status Monitor Context Menu

The following menu is displayed when the settings icon is clicked.

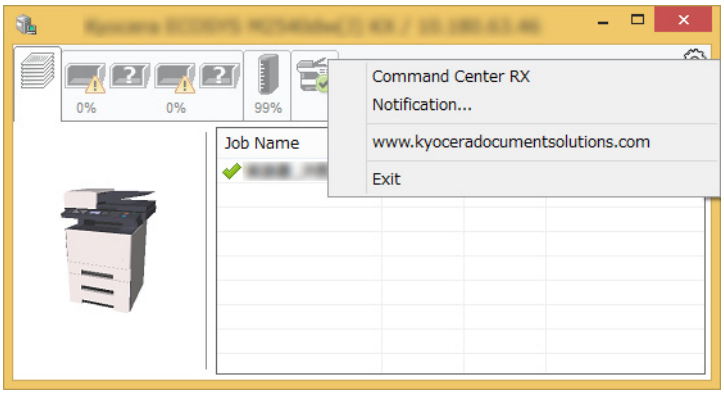

- **Command Center RX**
  If the printer is connected to a TCP/IP network and has its own IP address, use a web browser to access the Command Center RX to modify or confirm the network settings.This menu is not displayed when using USB connection.
  ➔ **Command Center RX User Guide**
- Notification…
  This sets the display of the Status Monitor.
  ➔ Status Monitor Notification Settings (page 4-20)
- **www.kyoceradocumentsolutions.com**
  Open our website.
- **Exit**
  Exits the Status Monitor.

Status Monitor Notification Settings

Click the setting icon to display valid events in the status monitor notification screen.

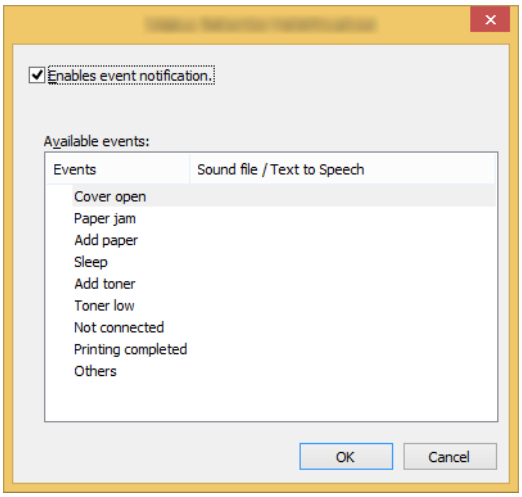

Select whether notification is performed when an error in the event list occurs.

1 Select Enable event notification.

If this setting is set to Off, then the Status Monitor will not start up even when printing is executed.

2 Select an event to use with the text to speech function in Available events.

3 Click Sound file / Text to Speech column.

Click the browse (...) button to notify the event by sound file.

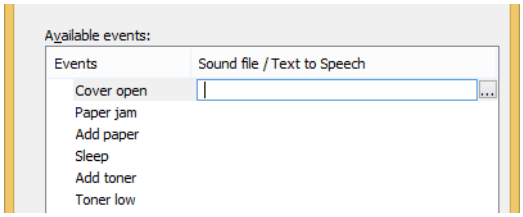

NOTE

The available file format is WAV.

When customizing the message texts to read on the screen aloud, enter the texts in the text box.

Configuration Tool

You can use the Configuration Tool to check and change settings on the machine.

Accessing the Configuration Tool

1 Insert the DVD.

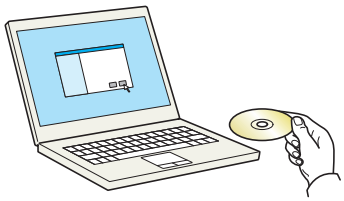

NOTE

- Installation on Windows must be done by a user logged on with administrator privileges.
- If the "Welcome to the Found New Hardware Wizard" dialog box displays, select [**Cancel**].
- If the autorun screen is displayed, click [**Run setup.exe**].
- If the user account management window appears, click [**Yes**] ([**Allow**]).

2 Display the screen.

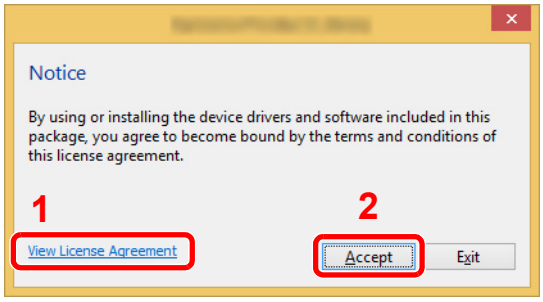

1 Click [**View License Agreement**] and read the License Agreement.

2 Click [**Accept**].

3 Select [Maintenance].

4 [Configuration Tool] > [OK]

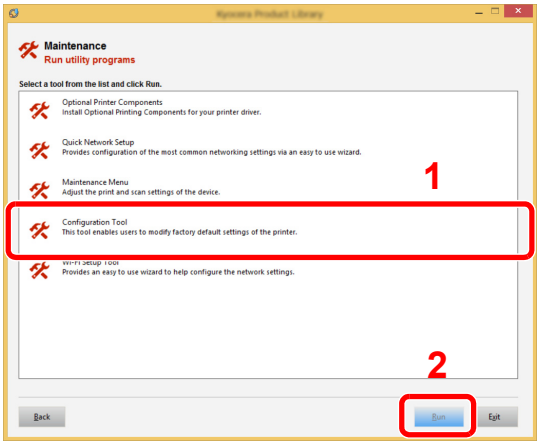

5 Select the driver of the machine. > [OK]

The Configuration Tool window appears.

Exiting the Configuration Tool

Use either of the methods listed below to exit the Configuration Tool.

- Exit using the Close button:

  Click  in the top-right corner of the Configuration Tool window.

- Exit using the OK or Cancel button:

  Clicking OK exits the Configuration Tool after applying the modified printer settings. Clicking Cancel exits the Configuration Tool without applying the modified printer settings.

Configuration Tool Settings Screen

Device Defaults Settings

Configure printer driver default settings and the energy save function of the machine.

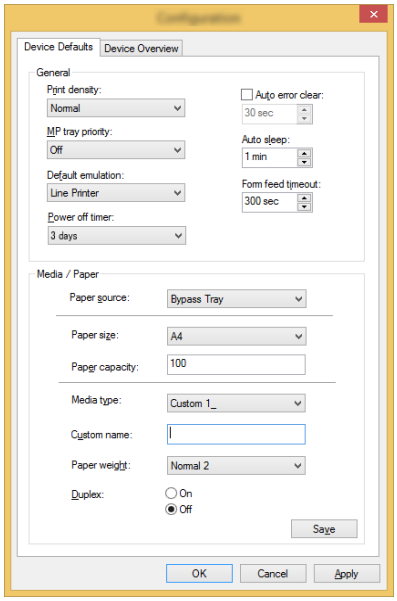

Item	Description
Print density	Adjust print density. **Value: Light, Medium light, Normal, Medium dark, Dark**
MP tray priority	If paper is set in the multipurpose tray then it is possible for priority to be given to that multipurpose tray in the paper feed. **Values** **Off: The printer driver settings are followed.** **Auto Feed: If Auto is selected in the printer driver and there is paper in the multipurpose tray then the paper feed will be from the multipurpose tray.** **Always: If there is paper in the multipurpose tray then the paper feed will be from the multipurpose tray regardless of what is set in the printer driver.**
Default emulation	Select the emulation for operating this machine by commands oriented to other types of printers. **Values: Line Printer, IBM Proprinter, EPSON LQ-850, PCL 6, KPDL, KPDL(Auto)**
Power off timer (models for Europe)	Select whether to turn off the power automatically after a period of inactivity. **Value: 1 hour, 2 hours, 3 hours, 4 hours, 5 hours, 6 hours, 9 hours, 12 hours, 1 day, 2 days, 3 days, 4 days, 5 days, 6 days, 1 week**
Auto error clear	If an error occurs during processing, processing stops to wait for the next step to be taken by the user. In the Auto Error Clear mode, automatically clear the error after a set amount of time elapses. **Value: Off, On (5 to 495 seconds (in 5 second increments))**
Auto sleep	Set amount of time before entering Sleep. **Value** **For Europe** **1 to 120 minutes (1 minute increments)** **Except for Europe** **1 to 240 minutes (1 minute increments)**

Item	Description
Form feed timeout	Receiving print data from the computer, the machine may sometimes wait if there is no information signaling that the last page does not have any more data to be printed. When the preset timeout passes, the machine automatically prints paper. The options are between 5 and 495 seconds. **Value: 5 to 495 seconds (in 5 second increments)**
Paper source	Select the default paper source. **Values: MP Tray, Cassette 1 (to3)** **NOTE** [**Casette 2**] and [**Casette 3**] are shown when the optional paper feeder is installed.
Paper size	Select the paper size to be used. **Values:** **Cassette 1 (to3): Letter, Legal, Statement, Executive, A4, A5, A5-R, A6, Folio, B5 (JIS), B5 (ISO), Oficio II, 216 × 340 mm, 16K, Custom** **Bypass Tray: Letter, Legal, Statement, Executive, A4, A5, A5-R, A6, B6, Folio, B5 (JIS), B5 (ISO), Envelope #10, Envelope #9, Envelope #6, Envelope Monarch, Envelope C5, Envelope DL, Oficio II, 216 × 340 mm, 16K, Hagaki (Cardstock), OufukuHagaki (Return postcard), Youkei 2, Youkei 4, Custom**
Paper capacity	Show the maximum number of sheets that can be loaded in the selected paper source.
Media type	Select the media type of paper to be used. **Values: Plain, Transparency, Preprinted, Labels, Bond, Recycled, Vellum, Rough, Letterhead, Color, Prepunched, Envelope, Cardstock, Thick, High quality, Custom 1 to 8** **NOTE** You can select [**Custom 1**] to [**Custom 8**] to change the paper type name and duplex printing settings.
Custom name	When [**Custom 1**] to [**Custom 8**] is selected in "Media Type", you can assign a name to the set paper type. Names should be not more than 16 characters.
Duplex	When [**Custom 1**] to [**Custom 8**] is selected in "Media Type", you can select duplex printing settings. **Value: Off, On**
Paper weight	Set the paper weight (thickness) of the paper type selected in "Media type". **Value: Light, Normal 1 to 3, Heavy 1 to 3, Extra Heavy**

Device Overview

Display machine information.

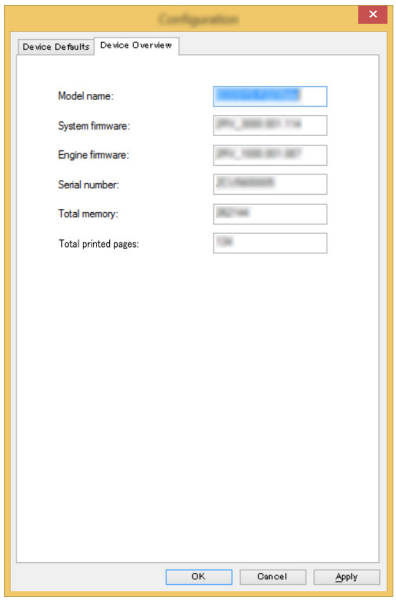

Item	Description
Model name	Displays the machine's model name.
System firmware	Displays the version of the machine's system firmware.
Engine firmware	Displays the version of the machine's engine firmware.
Serial number	Displays the machine's serial number.
Total memory	Displays the machine's memory capacity in bytes.
Total printed pages	Displays the total number of pages printed on the machine.

5 Operation on the Machine

This chapter explains the following topics:

Loading Originals 5-2
Placing Originals on the Platen 5-2
Loading Originals in the Document Processor 5-3
Loading Paper in the Multipurpose Tray 5-5
Program 5-8
Registering Programs 5-8
Recalling Program 5-9
Overwriting Program 5-10
Deleting Program 5-10
Select Key Settings 5-11
Copying 5-12
Basic Operation 5-12
Canceling Jobs 5-13
Frequently-Used Sending Method 5-14
Sending Document via E-mail 5-15
Configuring Settings before Sending 5-15
Sending Scanned Document via E-mail 5-15
Sending Document to Desired Shared Folder on a Computer (Scan to PC) 5-16
Configuring Settings before Sending 5-16
Sending Document to Desired Shared Folder on a Computer 5-16
Sending Document to Folder on an FTP Server (Scan to FTP) 5-18
Configuring Settings before Sending 5-18
Sending Document to Folder on an FTP Server 5-18
Scanning using TWAIN or WIA 5-20
Configuring Settings before Sending 5-20
Scanning Document Using Application 5-20
Useful Sending Method 5-21
WSD Scan 5-22
Installing Driver Software 5-22
WSD scan 5-23
Using fax server to send a fax (fax server transmission) 5-25
Configuring Settings before Sending 5-25
Using fax server to send a fax 5-25
Sending to Different Types of Destinations (Multi Sending) 5-27
Send to Me (E-mail) 5-28
Sending a document to the mail address of the logged in user 5-28
Canceling Sending Jobs 5-29
Handling Destination 5-30
Specifying Destination 5-30
Choosing from the Address Book 5-30
Choosing from the External Address Book 5-31
Choosing from the One Touch Key ... 5-32
Checking and Editing Destinations ... 5-33
Confirmation Screen of Destinations 5-34
Recall 5-34
How to use the FAX Function 5-35
Using Document Boxes 5-36
What is Job Box? 5-36
What is Removable Memory Box? 5-36
What is Sub Address Box/Polling Box? 5-36
Operating using Removable USB Memory 5-37
Printing Documents Stored in Removable USB Memory 5-37
Saving Documents to USB Memory (Scan to USB) 5-39
Check the USB Memory Information 5-40
Removing USB Memory 5-40

Loading Originals

Load the originals on the platen or document processor, depending on the original size, type, volume, and function.

- Platen: Place the sheet, book, postcards, and envelopes.
- Document Processor: Place the multiple originals.

Placing Originals on the Platen

You may place books or magazines on the platen in addition to ordinary sheet originals.

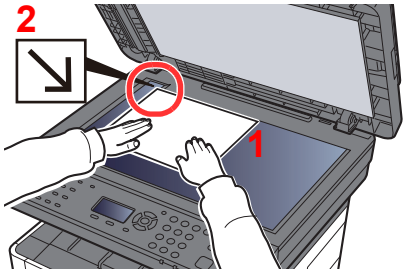

1 Put the scanning side facedown.

2 Align it flush against the original size indicator plates with the back left corner as the reference point.

NOTE

For details on Original Orientation, refer to the following:

Original Orientation (page 6-15)

When you place envelopes or cardstock on the platen

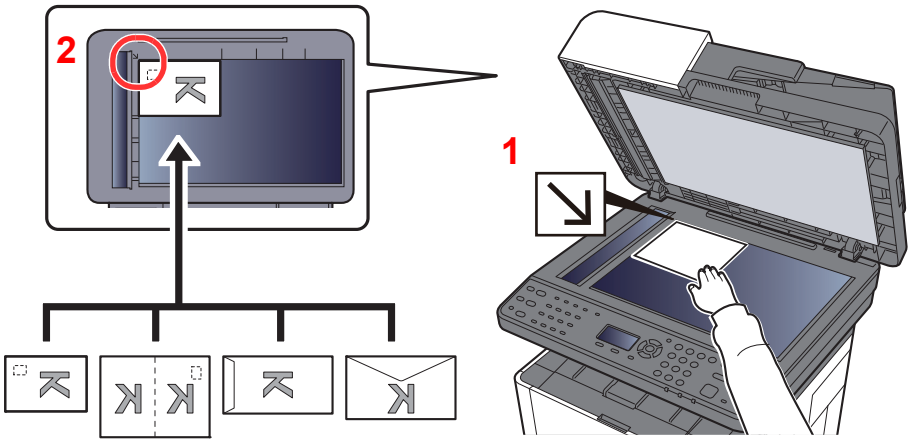

1 Put the scanning side facedown.

2 Align it flush against the original size indicator plates with the back left corner as the reference point.

NOTE

For the procedure for feeding envelopes or cardstock, refer to the following:

When you load envelopes or cardstock in the multipurpose tray (page 5-7)

CAUTION

Do not leave the document processor open as there is a danger of personal injury.

IMPORTANT

- **Do not push the document processor forcefully when you close it. Excessive pressure may crack the platen glass.**
- **When placing books or magazines on the machine, do so with the document processor in the open position.**

Loading Originals in the Document Processor

The document processor automatically scans each sheet of multiple originals.

The document processor supports the following types of originals.

Weight	50 to 160 g/m^2
Sizes	Maximum Folio (Legal) to Minimum A6 (Statement)
No. of sheets	Plain paper (80 g/m^2): 50 sheets (Mixed size originals: 50 sheets) Thick (120 g/m^2): 25 sheets

Do not use the document processor for the following types of originals. Otherwise, the originals may be jammed or the document processor may become dirty.

- Originals bound with clips or staples (Remove the clips or staples and straighten curls, wrinkles or creases before loading. Failure to do so may cause the originals to jam.)
- Originals with adhesive tape or glue
- Originals with cut-out sections
- Curled original
- Originals with folds (Straighten the folds before loading. Failure to do so may cause the originals to jam.)
- Carbon paper
- Crumpled paper

IMPORTANT

- **Before loading originals, be sure that there are no originals left on the original eject table. Originals left on the original eject table may cause the new originals to jam.**
- **Do not make an impact on the document processor top cover, such as aligning the originals on the top cover. It may cause an error in the document processor.**

1 Open the original table and then adjust the original width guides.

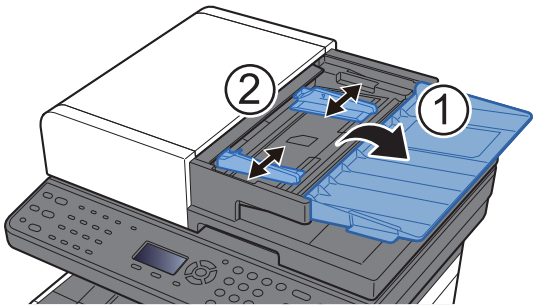

2 Place the originals.

1 Put the side to be scanned face-up. Slide the leading edge into the document processor as far as it will go.

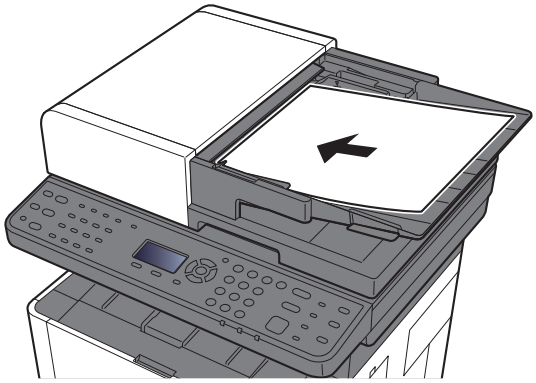

NOTE

For details on Original Orientation, refer to the following:

Original Orientation (page 6-15)

IMPORTANT

Confirm that the original width guides exactly fit the originals. If there is a gap, readjust the original width guides. The gap may cause the originals to jam.

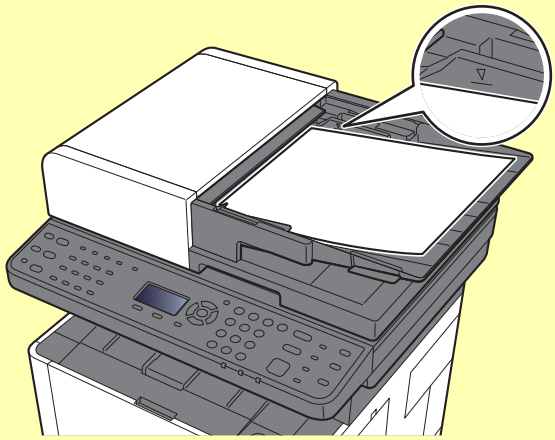

Ensure that loaded originals do not exceed the level indicator. Exceeding the maximum level may cause the originals to jam.

Originals with punched holes or perforated lines should be placed in such a way that the holes or perforations will be scanned last (not first).

2 Open the original stopper to fit the size of the original set (Original size: Folio/Legal).

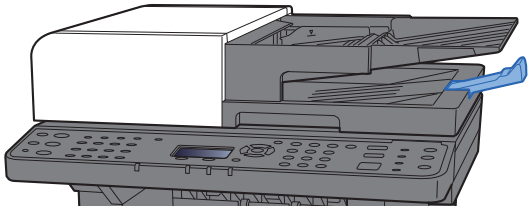

Loading Paper in the Multipurpose Tray

For details of the supported paper sizes, refer to the following:

Choosing the Appropriate Paper (page 11-14)

For the paper type setting, refer to the following:

Media Type Setting (page 8-20)

Be sure to use the multipurpose tray when you print on any special paper.

IMPORTANT

- **If you are using a paper weight of 106 g/m^2 or more, set the media type to Thick and set the weight of the paper you are using.**
- **Remove each transparency from the inner tray as it is printed. Leaving transparencies in the inner tray may cause a paper jam.**

The capacity of the multipurpose tray is as follows.

- Plain paper (80 g/m^2) or recycled paper: 100 sheets
- Thick paper (209 g/m^2): 5 sheets
- Thick paper (157 g/m^2): 5 sheets
- Thick paper (104.7 g/m^2): 70 sheets
- Hagaki (Cardstock): 15 sheets
- Envelope DL, Envelope C5, Envelope #10, Envelope #9, Envelope #6 3/4, Envelope Monarch, Youkei 4, Youkei 2: 5 sheets
- OHP film: 1 sheet

NOTE

- When you load custom size paper, enter the paper size by referring to the following:

Orig./Paper Set. (page 8-16)

- When you use special paper such as transparencies or thick paper, select the media type by referring to the following:

MP Tray Set. (Multipurpose Tray Settings) (page 8-19)

1 Open the multipurpose tray.

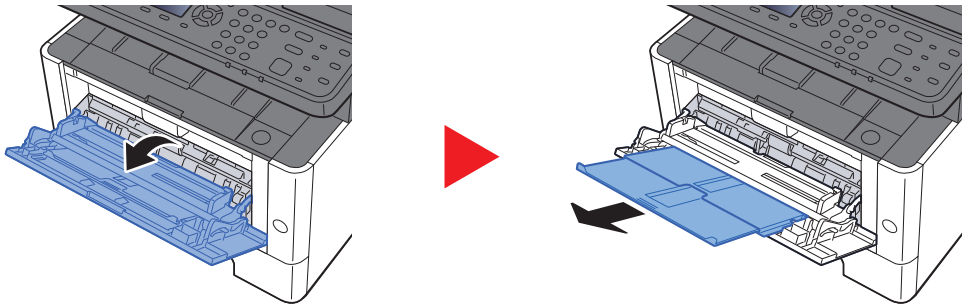

2 Adjust the multipurpose tray size.

Paper sizes are marked on the multipurpose tray.

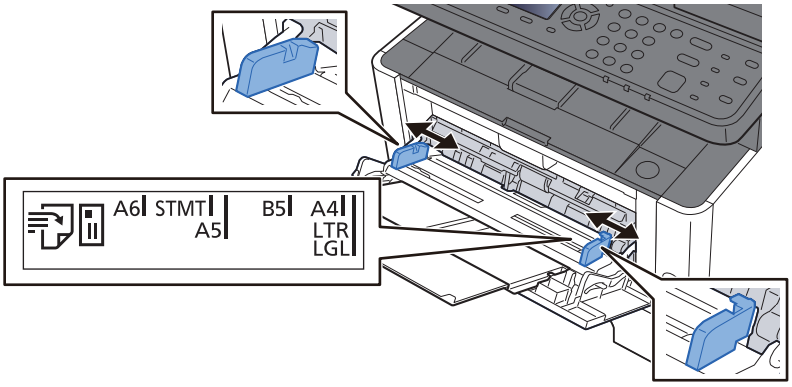

3 Load paper.

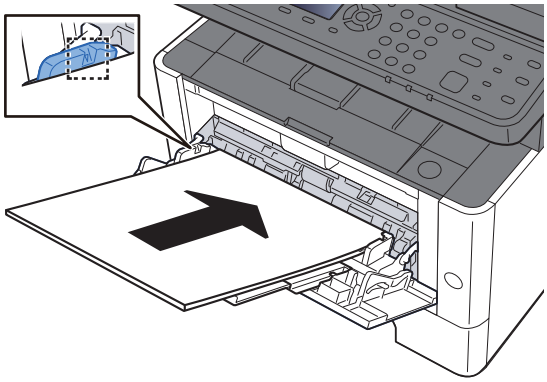

Insert the paper along the paper width guides into the tray until it stops.

After removing new paper from its packaging, fan the paper before loading it in the multipurpose tray.

Precaution for Loading Paper (page 3-2)

IMPORTANT

- **When loading the paper, keep the print side facing down.**
- **Curled paper must be uncurled before use.**
- **When loading paper into the multipurpose tray, check that there is no paper left over in the tray from a previous job before loading the paper. If there is just a small amount of paper left over in the multipurpose tray and you want to add more, first remove the left-over paper from the tray and include it with the new paper before loading the paper back into the tray.**
- **If there is a gap between the paper and the paper width guides, readjust the guides to fit the paper in order to prevent skewed feeding and paper jams.**
- **Ensure that the loaded paper does not exceed the load limits.**

4 Specify the type of paper loaded in the multipurpose tray using the operation panel.

MP Tray Set. (Multipurpose Tray Settings) (page 8-19)

When you load envelopes or cardstock in the multipurpose tray

Load the paper with the print side facing up. For the procedure for printing, refer to the following:

Printer Driver User Guide

Example: When printing the address.

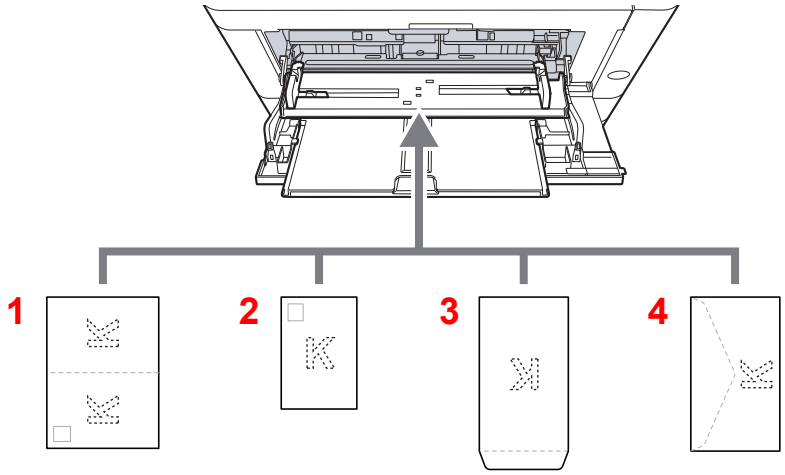

1 Oufuku hagaki (Return postcard)
2 Hagaki (Cardstocks)
3 Portrait form envelopes
4 Landscape form envelopes

IMPORTANT

- **Use unfolded Oufuku hagaki (Return postcard).**
- **How to load envelopes (orientation and facing) will differ depending on the type of envelope. Be sure to load it in correctly, otherwise printing may be done in the wrong direction or on the wrong face.**

NOTE

When you load envelopes in the multipurpose tray, select the envelope type by referring to the following:

MP Tray Set. (Multipurpose Tray Settings) (page 8-19)

Program

By registering sets of frequently used functions as a single program, you can simply select one of the [**Program I**] to [**Program IV**] keys as needed to recall those functions.

The following functions are already registered in [**Program I**] key. This function allows you to copy the front and back sides of ID card or other document that is smaller than Statement or A5/Statement size onto a single page. Although the functions are deleted by overwriting [**Program I**] key, you can register the same settings using the [**Function Menu**] key.

- Paper Selection: Cassette 1
- Same size
- Combine: 2 in 1
- Original size: A5/Statement
- Continuous scanning: ON



NOTE

- It is possible to register the copy function, sending function and fax function in a program. (The fax function can be registered or recalled only on products with the fax function installed)
- If user login administration is enabled, you can only register functions by logging in with administrator privileges.

Registering Programs

1 Configure the settings of the functions.

Configure the settings of the functions you want to register in a program.

For the settings of functions, refer to the following:

Using Various Functions (page 6-1)

NOTE

In the case of the sending function and fax function, a destination is also registered in the program.

2 Register the program.

Press the one of the [**Program I**] to [**Program IV**] keys where you want to register the settings and hold it (2 seconds or more).

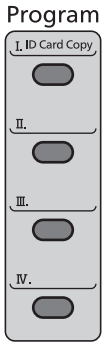

The current settings are registered to the selected program key.

Recalling Program

Select the one of the [**Program I**] to [**Program IV**] keys where the settings you want to recall are registered. The current settings of various functions are replaced with the registered settings.

Place the originals and press the [**Start**] key.

Overwriting Program

1 Configure the settings of the functions.

Set the function to change.

For the settings of functions, refer to the following:

Using Various Functions (page 6-1)

NOTE

In the case of the sending function and fax function, a destination is also registered in the program.

2 Overwrite the program.

1 Press the one of the [**Program I**] to [**Program IV**] keys to change and hold it (2 seconds or more).

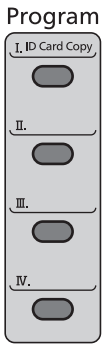

2 [▲] [▼] key > [**Overwrite**] > [**OK**] key > [**Yes**]

Register the changed program.

Deleting Program

1 Display the screen.

Press the one of the [**Program I**] to [**Program IV**] keys to delete and hold it (2 seconds or more).

2 Delete the program.

[▲] [▼] key > [**Delete**] > [**OK**] key > [**Yes**]

Select Key Settings

Commonly used functions can be registered to the Select key. Functions can be easily configured by selecting the Select key.

Functions can be registered in Select keys from the system menu.

Copy (page 8-28)
Send (page 8-31)
Document Box (page 8-32)

Copying

The procedures here represent the basic copy operation and how to cancel the copy.

Basic Operation

1 Select the [Copy] key.

2 Place the originals.

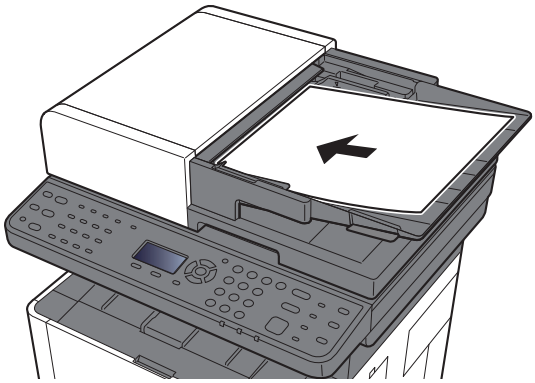

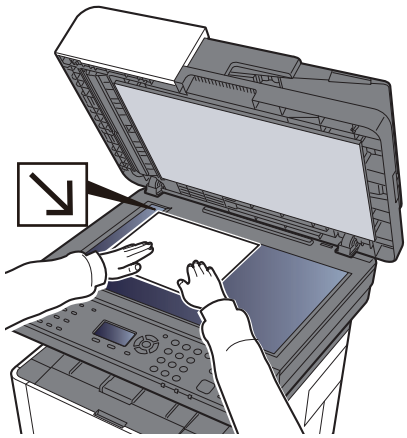

Loading Originals (page 5-2)

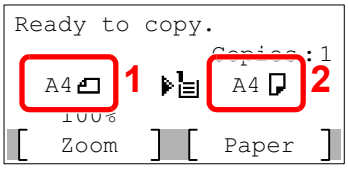

1 Original size

2 Paper size

Check the original size and the paper size.

NOTE

For selecting the original size, refer to the following:

Original Size (page 6-15)

For selecting the paper source, refer to the following:

Paper Selection (page 6-8)

3 Select the functions.

Select the [**Function Menu**] key to select the copier functions to use.

Copy (page 6-3)

4 Use the numeric keys to enter the copy quantity.

Specify the desired number up to 999.

5 Press the [Start] key.

Copying begins.

Canceling Jobs

1 Select the [Stop] key with the copy screen displayed.

2 Cancel a job.

1 [▲] [▼] key > [**Cancel Print Job**] > [**OK**] key

2 Select the job to cancel, and [**Menu**].

3 [▲] [▼] key > [**Cancel Job**] > [**OK**] key

> **NOTE**
> Select [**Detail**] and the [**OK**] key to show the detailed information of the job.

4 Select [**Yes**].

The job is canceled.

NOTE
During scanning, the job can be canceled by selecting the [**Stop**] key or [**Cancel**].

Frequently-Used Sending Method

This machine can send a scanned image as an attachment of an E-mail message or to a PC linked to the network. In order to do this, it is necessary to register the sender and destination (recipient) address on the network.

A network environment which enables the machine to connect to a mail server is required in order to send E-mail. It is recommended that a Local Area Network (LAN) be used to assist with transmission speed and security issues.

Follow the steps below for basic sending. The following four options are available.

- Send as E-mail (E-mail Addr Entry): Sends a scanned original image as an E-mail attachment.

Sending Document via E-mail (page 5-15)

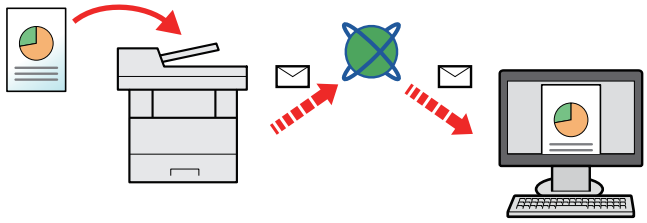

- Send to Folder (SMB): Stores a scanned original image in a shared folder of any PC.

Sending Document to Desired Shared Folder on a Computer (Scan to PC) (page 5-16)

- Send to Folder (FTP): Stores a scanned original image in a folder of an FTP server.

Sending Document to Folder on an FTP Server (Scan to FTP) (page 5-18)

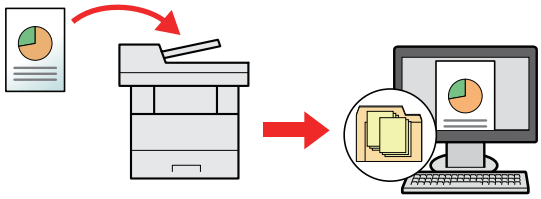

- Image Data Scanning with TWAIN / WIA: Scan the document using a TWAIN or WIA compatible application program.

Scanning using TWAIN or WIA (page 5-20)

NOTE

- Different sending options can be specified in combination.

Sending to Different Types of Destinations (Multi Sending) (page 5-27)

- The fax function can be used on products equipped with fax capability.

FAX Operation Guide

Sending Document via E-mail

Configuring Settings before Sending

Before sending an E-mail, configure the SMTP and E-mail settings using the Command Center RX.

E-mail Settings (page 2-45)

Sending Scanned Document via E-mail

1 Select the [Send] key.

2 Place the originals.

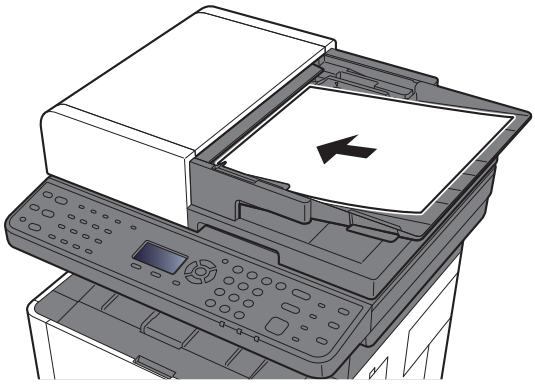

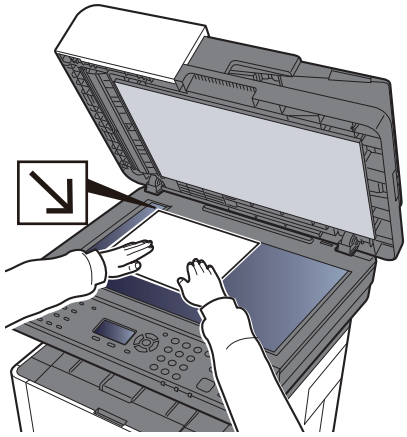

Loading Originals (page 5-2)

3 [▲] [▼] key > [E-mail] > [OK] key

4 Enter destination E-mail address > [OK] key

Up to 128 characters can be entered.

Character Entry Method (page 11-8)

To enter multiple destinations, select [**Confirm/Add Destination**] key and enter the next destination. Up to 100 E-mail addresses can be specified.

Destinations can be changed later.

Confirmation Screen of Destinations (page 5-34)

5 Select the functions.

Select the [**Function Menu**] key to select the send functions to use.

Send (page 6-4)

6 Press the [Start] key.

Sending starts.

Sending Document to Desired Shared Folder on a Computer (Scan to PC)

Configuring Settings before Sending

Before sending an document, configure the following settings.

- Make a note of the computer name and full computer name
  - Making a note of the computer name and full computer name (page 3-8)
- Make a note of the user name and domain name
  - Making a note of the user name and domain name (page 3-9)
- Create a shared folder and make a note of a shared folder
  - Creating a Shared Folder, Making a Note of a Shared Folder (page 3-10)
- Configure the Windows firewall
  - Configuring Windows Firewall (page 3-13)

Sending Document to Desired Shared Folder on a Computer

1 Select the [Send] key.

2 Place the originals.

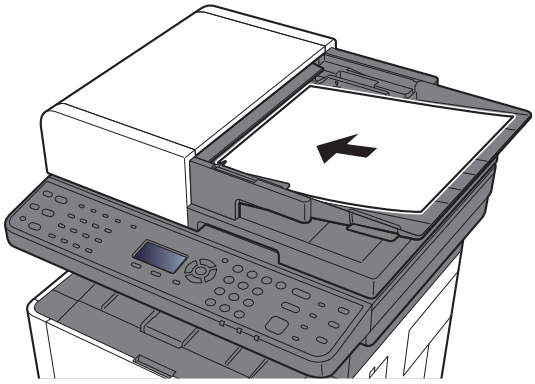

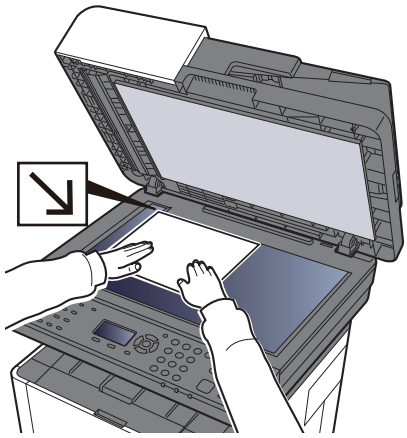

- Loading Originals (page 5-2)

3 [▲] [▼] key > [Folder(SMB)] > [OK] key

4 Enter the destination information.

Enter the information for each item and select the [**OK**] key.

- Character Entry Method (page 11-8)

The table below lists the items to be set.

Item	Detail	Max. characters
Host Name *1	Computer name	Up to 64 characters
Path	Share name For example: scannerdata If saving in a folder in the shared folder: share name\folder name in shared folder	Up to 128 characters
Login User Name	If the computer name and domain name are the same: User Name For example: james.smith If the computer name and domain name are different: Domain name\User name For example: abcdnet\james.smith	Up to 64 characters
Login Password	Windows logon password **(Case sensitive.)**	Up to 64 characters

*1 You can also specify the port number. Enter the following format separated by a colon.
"Host name: port number" or "IP address: port number"
To enter the IPv6 address, enclose the address in brackets [ ].
(Example: [2001:db8:a0b:12f0::10]:445)
If the port number is not specified, the default port number is 445.

5 Check the status.

The connection confirmation screen appears. Select [**Yes**] to check the connection and [**No**] to not check it.

"Connected." appears when connection to the destination is correctly established. If "Cannot connect." appears, review the entry.

To send to multiple destinations, repeat steps 3 to 4.

Destinations can be changed later.

Confirmation Screen of Destinations (page 5-34)

6 Select the functions.

Select the [**Function Menu**] key to select the send functions to use.

Send (page 6-4)

7 Press the [Start] key.

Sending starts.

Sending Document to Folder on an FTP Server (Scan to FTP)

Configuring Settings before Sending

Before sending an document, configure the FTP Client (Transmission).

ProtocolSettings (page 8-9)

Sending Document to Folder on an FTP Server

1 Select the [Send] key.

2 Place the originals.

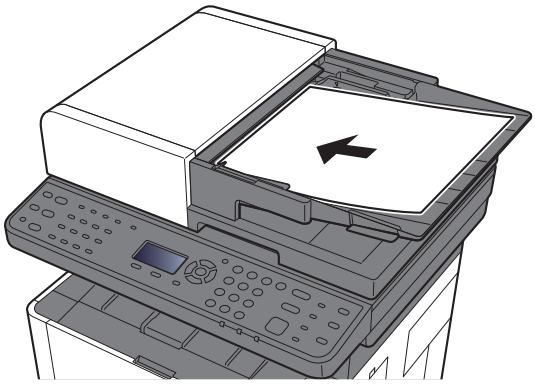

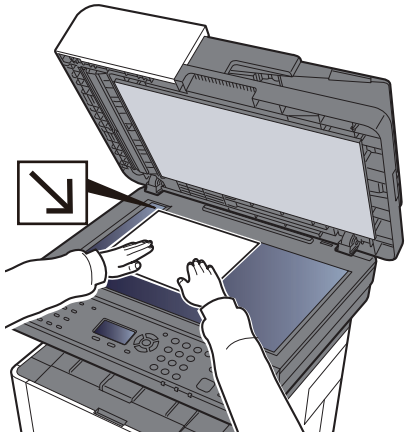

Loading Originals (page 5-2)

3 [▲] [▼] key > [Folder(FTP)] > [OK] key

4 Enter the destination information.

Enter the information for each item and select the [**OK**] key.

Character Entry Method (page 11-8)

The table below lists the items to be set.

Item	Data to be entered	Max. characters
Host Name *1	Host name or IP address of FTP server	Up to 64 characters
Path[*2]	Path to the receiving folder For example: User\ScanData Otherwise the data will be saved in the home directory.	Up to 128 characters
Login User Name	FTP server login user name	Up to 64 characters
Login Password	FTP server login password **(Case sensitive.)**	Up to 64 characters

*1 You can also specify the port number. Enter the following format separated by a colon.
"Host name: port number" or "IP address: port number"
To enter the IPv6 address, enclose the address in brackets [ ].
(Example: [2001:db8:a0b:12f0::10]:21)
If the port number is not specified in [Host Name], the default port number is 21.

*2 When the FTP server is based on Linux/UNIX, the path including the sub-folder is combined by the slash "/" not using the back-slash.

5 Check the status.

The connection confirmation screen appears. Select [**Yes**] to check the connection and [**No**] to not check it.

"Connected." appears when connection to the destination is correctly established. If "Cannot connect." appears, review the entry.

To send to multiple destinations, repeat steps 3 to 4.

Destinations can be changed later.

Checking and Editing Destinations (page 5-33)

6 Select the functions.

Select the [**Function Menu**] key to select the send functions to use.

Send (page 6-4)

7 Press the [Start] key.

Sending starts.

Scanning using TWAIN or WIA

Configuring Settings before Sending

Before sending an document, confirm that TWAIN/WIA driver is installed on a computer and the settings are configured.

Setting TWAIN Driver (page 2-34)

Setting WIA Driver (page 2-36)

Scanning Document Using Application

This subsection explains how to scan an original using TWAIN. The WIA driver is used in the same way.

1 Display the screen.

1 Activate the TWAIN compatible application software.

2 Select the machine using the application and display the dialog box.

NOTE
For selecting the machine, see the Operation Guide or Help for each application software.

2 Configure the scan settings.

Select scanning settings in the dialog box that opens.

NOTE
For the settings, refer to Help in the dialog box.

3 Place the originals.

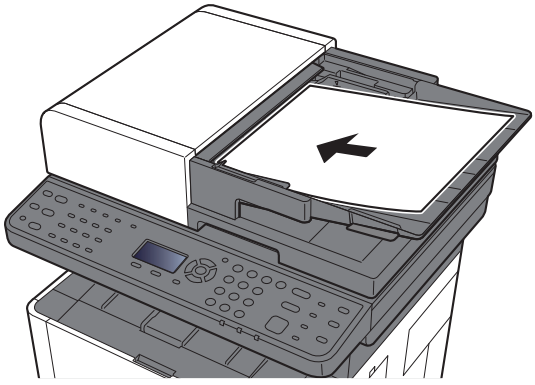

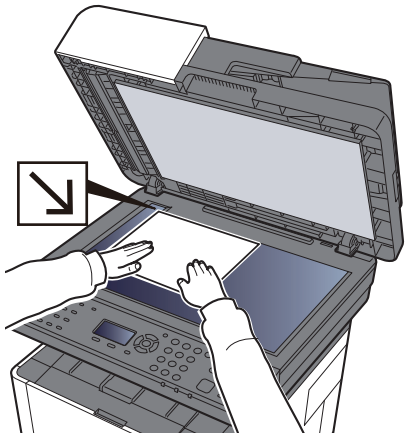

Loading Originals (page 5-2)

4 Scan the originals.

Click the [**Scan**] button. The document data is scanned.

Useful Sending Method

You can specify the following useful scanning (sending) methods.

- WSD Scan: Saves images of originals scanned on this machine as files on a WSD-compatible computer.

WSD Scan (page 5-22)

- Sending to different types of destinations (Multi sending): Sends to different types of destination (E-mail addresses, folders, etc.) in a single operation.

Sending to Different Types of Destinations (Multi Sending) (page 5-27)

- Send to Me (E-mail): Sends to the E-mail address of the logged in user when user login is enabled.

Send to Me (E-mail) (page 5-28)

WSD Scan

WSD Scan saves images of originals scanned on this machine as files on a WSD-compatible computer.

NOTE

- To use WSD Scan, confirm that the computer used for WSD scanning and the machine is network-connected, and "WSD Scan" is set to [**On**] in the network settings.

WSD-SCAN (page 8-11)

- For information on operating the computer, refer to the computer's help or the operation guide of your software.

Installing Driver Software

In Windows 8, Windows 8.1 and Microsoft Windows Server 2012

1 Click [Search] in charms, [Control Panel], and then [View devices and printers].

2 Install the driver.

Click [**Add a device**]. Select the machine's icon and then click [**Next**].

When the machine's icon is displayed in "**Printers**" on the [**Devices and Printers**] screen, the installation is completed.

In Windows 7

1 Display [Network] in the Start menu.

Click [**Start**] button on the Windows and then select [**Network**].

NOTE

When [**Network**] does not appear in the Start menu, perform the following procedure.

1. Right-click [**Start**] and click [**Property**] in the menu that appears.
2. Select the [**[Start] menu**] tab in the "**Task bar and [Start] menu properties**" screen, and click [**Customize**].
3. When the "**Customize [Start] menu**" screen appears, select the "**Network**" check box and click [**OK**].

2 Install the driver.

Right-click the machine's icon and then click [**Install**].

NOTE

If the "**User Account Control**" window appears, click [**Continue**].
If the "**Found New Hardware**" window appears, click [**Cancel**].

During the installation, double-click the icon shown on the task bar to display the "**Driver Software Installation**" screen. When "**Your devices are ready to use**" is displayed on the [**Driver Software Installation**] screen, the installation is completed.

For Windows 10

1 **Right-click [Start] button on the Windows and select [Control Panel] and then [View devices and printer].**

2 **Install the driver.**

Click [**Add a device**]. Select the machine's icon and then click [**Next**].

When the machine's icon is displayed in "**Printers**" on the [**Devices and Printers**] screen, the installation is completed.

WSD scan

1 **Select the [Send] key.**

2 **Place the originals.**

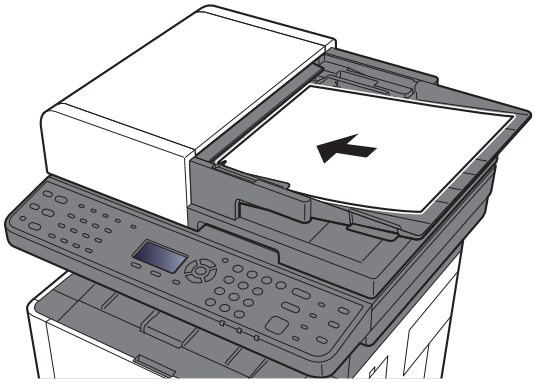

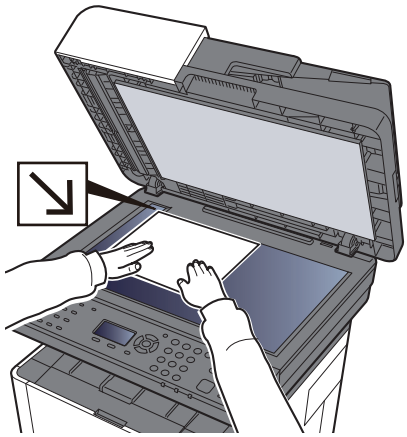

Loading Originals (page 5-2)

3 **Display the screen.**

[▲] [▼] key > [**WSD Scan**] > [**OK**] key

4 Scan the originals.

Procedure using this machine

1. [▲] [▼] key > [**From Oper. Panel**] > [**OK**] key
2. Select the destination computer, and select the [**OK**] key.

   You can view information on the selected computer by selecting [**Detail**].
3. Select the [**Function Menu**] key to set the type of original, file format, etc., as desired.
4. Press the [**Start**] key.

   Sending begins and the software installed on the computer is activated.

Procedure from Your Computer

1. [▲] [▼] key > [**From Computer**] > [**OK**] key
2. Use the software installed on the computer to send the images.

Using fax server to send a fax (fax server transmission)

You can send a scanned document through a fax server.

NOTE
To use this function, you must have a fax server. For information on your fax server, ask your administrator.

Configuring Settings before Sending

Before sending a fax, the following setting is required.

- Configure the fax server settings.

FAX Server Settings (page 8-14)

Command Center RX User Guide

Using fax server to send a fax

1 Select the [Send] key.

2 Place the originals.

Place the originals.

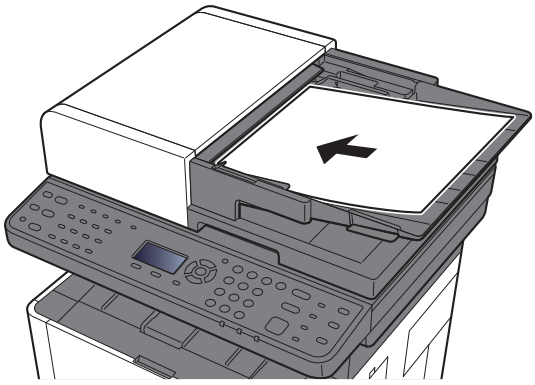

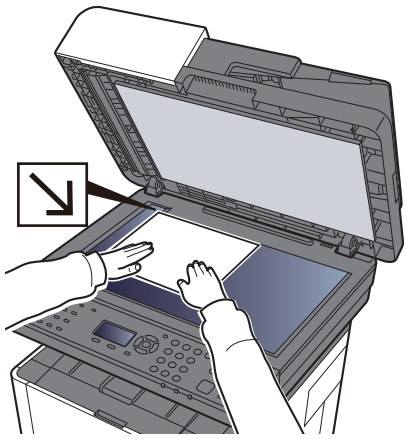

Loading Originals (page 5-2)

3 [▲] [▼] key > [FAX Server] > [OK] key

4 Specifying destination.

Entering the destination fax number with the numeric keys

1 Select [**Fax No. Entry**].

2 Enter the fax number.

> **NOTE**
> Use the numeric keys to enter a number.

3 Select [**OK**] key.

Destinations can be changed later.

Confirmation Screen of Destinations (page 5-34)

Choosing from the Address Book

1 Select [**Address Book**].

> **NOTE**
> The address book set in [**AddrBookDefaults**] of "FAX Server Set." is displayed.

2 Select the destination.

Choosing from the Address Book (page 5-30)

3 Select [**OK**] key.

Destinations can be changed later.

Confirmation Screen of Destinations (page 5-34)

5 Select the functions.

Select the [**Function Menu**] key to select the send functions to use.

Send (page 6-4)

6 Press the [Start] key.

Sending starts.

Sending to Different Types of Destinations (Multi Sending)

You can specify destinations that combine E-mail addresses, folders (SMB or FTP) and fax numbers (Fax functionality can only be used on products equipped with fax capability.). This is referred to as Multi Sending. This is useful for sending to different types of destination (E-mail addresses, folders, etc.) in a single operation.

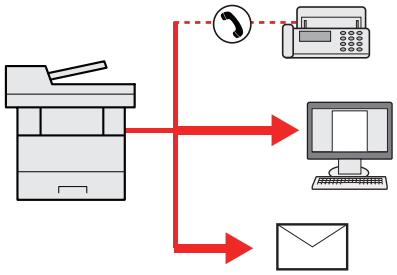

No. of broadcast items: Up to 100
However, number of items are restricted for the following sending options.
Folders (SMP, FTP): Total of 5 SMB and FTP

Procedures are the same as used in specifying the destinations of respective types. Continue to enter E-mail address or folder path so that they appear in the destination list. Press the [**Start**] key to start transmission to all destinations at one time.

NOTE

If the destinations include a fax, the images sent to all destinations will be black and white.

Send to Me (E-mail)

When user login is enabled, the document is sent to the E-mail address of the logged in user.

NOTE

- To use this function, user control must be set to network authentication and the e-mail address of the user must be registered in the network authentication server.
- For the procedure for setting an e-mail address, check with the administrator for network authentication server users.

Sending a document to the mail address of the logged in user

1 In the basic screen for sending, select [▲] [▼] key > [Me(E-mail)] > [OK] key

NOTE

If the e-mail address is not registered in the network authentication server, e-mail cannot be sent.

Canceling Sending Jobs

1 Select the [Stop] key with the send screen displayed.

The [**Job Cancel List**] menu appears.

NOTE
Selecting the [**Stop**] key will not temporarily stop a job that you have already started sending.

2 Cancel jobs.

1 [▲] [▼] key > [**Cancel Send Job**] > [**OK**] key

2 Select the job to cancel, and [**Menu**].

3 [▲] [▼] key > [**Cancel Job**] > [**OK**] key

NOTE
Select [**Detail**] and the [**OK**] key to show the detailed information of the job.

4 Select [**Yes**].

The job is canceled.

NOTE
During scanning, the job can be canceled by selecting the [**Stop**] key or [**Cancel**].

Handling Destination

This section explains how to select and confirm the destination.

Specifying Destination

Select the destination using either of the following methods except entering address directly:

- Choosing from the Address Book
  - Choosing from the Address Book (page 5-30)
- Choosing from the External Address Book

  For details on the External Address Book, refer to the following:
  - **Command Center RX User Guide**
- Choosing from One Touch key.
  - Choosing from the One Touch Key (page 5-32)
- Choosing from the FAX
  - **FAX Operation Guide**

NOTE

- You can set the machine up so that the address book screen appears when you select the [**Send**] key.

Default Screen (page 8-31)

- If you are using the products equipped with the fax function, you can specify the fax destination. Enter the other party number using the numeric keypad.

Choosing from the Address Book

Registering Destinations in the Address Book (page 3-18)

1 In the basic screen for sending, select the [Address Book] key.

2 Select the destinations.

1 [▲] [▼] key > [**Address Book**] > [**OK**] key

NOTE

For details on the External Address Book, refer to the following:

- **Command Center RX User Guide**

2 Select the destination.

NOTE

When checking information of the destination, select [**Menu**] > [**Details**] > [**OK**] key

Destination Search

The destination can be searched by name.

1 [**Menu**] > [▲] [▼] key > [**Search (Name)**] > [**OK**] key

2 Enter characters to search using the numeric keys.

NOTE
For details on entering characters, refer to the following:
Character Entry Method (page 11-8)

3 Select the [**OK**] key.

The searched destination is displayed.

3 Select the [OK] key.

To send to multiple destinations, repeat steps 1 to 3. You can send to as many as 100 destinations at once.

Destinations can be changed later.

Confirmation Screen of Destinations (page 5-34)

Choosing from the External Address Book

NOTE
For details on the External Address Book, refer to the following:

Command Center RX User Guide

1 Display the screen.

1 In the basic screen for sending, select[**Address Book**] key [**Menu**] > [▲] [▼] key > [**Switch Addr Book**] > [**OK**] key

2 [▲] [▼] key > Select external address book > [**OK**] key

2 Select the destinations.

1 Select the destination.

NOTE
When checking information of the destination, select [**Menu**] > [**Details**] > [**OK**] key

Destination Search

The destination can be searched by name.

1 [**Menu**] > [▲] [▼] key > [**Search (Name)**] > [**OK**] key

2 Enter characters to search using the numeric keys.

NOTE

For details on entering characters, refer to the following:

Character Entry Method (page 11-8)

3 Select the [**OK**] key.

The searched destination is displayed.

3 Select the [OK] key.

To send to multiple destinations, repeat steps 1 to 3. You can send to as many as 100 destinations at once.

Destinations can be changed later.

Confirmation Screen of Destinations (page 5-34)

Choosing from the One Touch Key

In the basic screen for sending, select the One Touch Keys where the destination is registered.

NOTE

This procedure assumes that One Touch Keys have already been registered.
For more information on adding One Touch keys, refer to the following:

Adding a Destination on One Touch Key (One Touch Key) (page 3-25)

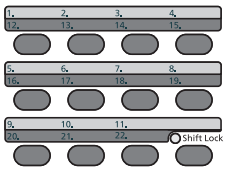

When selecting One Touch Key numbers 12 to 22, the One touch Key needs to be selected after switching on the [**Shift Lock**] indicator by selecting the [**Shift Lock**] key.

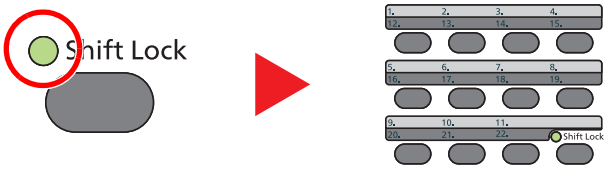

Destinations can be changed later.

Confirmation Screen of Destinations (page 5-34)

Checking and Editing Destinations

1 Display the screen.

Specify the destination.

Specifying Destination (page 5-30)

2 Check and edit the destination.

Select the [**Confirm/Add Destination**] key.

Add the destination

1 Select [**Add**].

2 Set the destinations to be added.

Specifying Destination (page 5-30)

Edit the destination

1 Select the destination you want to edit, and select the [**OK**] key.

2 [▲] [▼] key > [**Detail/Edit**] > [**OK**] key

3 Edit the destinations > [**OK**] key

Specifying Destination (page 5-30)

NOTE

To edit a destination registered in the address book or a One Touch Key, refer to the following:

Editing Address Book Entries (page 3-23)
Editing One Touch Key (page 3-26)

Delete the destination

1 Select the destination you want to delete, and select the [**OK**] key.

2 [▲] [▼] key > [**Delete**] > [**OK**] key > [**Yes**]

3 Select [Exit].

NOTE

When selecting [**On**] for Destination Check before Send, the confirmation screen appears after pressing the [**Start**] key.

Check beforeSend (page 8-31)
Confirmation Screen of Destinations (page 5-34)

Confirmation Screen of Destinations

When selecting [**On**] for Destination Check before Send, the confirmation screen of destinations appears after pressing the [**Start**] key.

DestinationCheck (page 8-31)

1 Confirm all destination.

To show the detailed information of the destination, select the destination and [**OK**] key > [▲] [▼] key > [**Detail**] > [**OK**] key

To delete the destination, select the destination you want to delete and [**OK**] key > [▲] [▼] key > [**Delete**] > [**OK**] key > [**Yes**]
The destination is deleted.

2 Select [**Next**].

NOTE
Be sure to confirm all destination by displaying them on the message display. You cannot select [**Next**] unless you have confirmed all destination.

Recall

Recall is a function allowing you to send the last entered destination once again. When you want to send the image to the same destination, select the [**Address Recall/Pause**] key, and you can call the destination you sent on the destination list.

NOTE
The products without the fax function have the [**Address Recall**] key instead of the [**Address Recall/Pause**] key.

1 Select the [Address Recall/Pause] key.

The destination you sent is displayed on the destination list.

NOTE
When the last sending included FAX, folders and E-mail destinations, they are also displayed. If necessary, add or delete the destination.

2 Press the [Start] key.

Sending starts.

NOTE
- When [**On**] is selected in "Check beforeSend", a destination confirmation screen is displayed when you press the [**Start**] key.

Confirmation Screen of Destinations (page 5-34)

- Recall information is canceled in the following conditions.
  - When you turn the power off
  - When you send a next image (new recall information is registered)
  - When you log out

How to use the FAX Function

On products with a FAX function, it is possible to use the FAX function.

FAX Operation Guide

Using Document Boxes

The available Document Boxes are as follows: Job Box, removal USB memory, Subaddress Box, and Polling Box.

What is Job Box?

Job Box is a generic name for the "Private Print/Stored Job Box" and "Quick Copy/Proof and Hold Box". These Job Boxes cannot be created or deleted by a user.

NOTE

- To use the Stored Job Box and the Quick Copy Box, an SD/SDHC memory card must be installed in the device.
- You can set up the machine so that temporary documents in job boxes are automatically deleted.

JobRet. Deletion (page 8-32)

- For details on operating the Job Box, refer to the following:

Printing Data Saved in the Printer (page 4-10)

IMPORTANT

Unencrypted data is saved on the SD/SDHC memory card.

Exercise caution when saving sensitive documents.

What is Removable Memory Box?

A USB memory stick can be connected to the USB memory slot on the machine to print a saved file. You can print data directly from the USB memory without a PC. Image files scanned using this machine can also be saved to USB memory in the PDF, TIFF, JPEG, XPS, OpenXPS or high compression PDF format (Scan to USB).

What is Sub Address Box/Polling Box?

Sub Address Box/Polling Box store the fax data.

FAX Operation Guide

Operating using Removable USB Memory

Plugging USB memory directly into the machine enables you to quickly and easily print the files stored in the USB memory without having to use a computer.

The following file types can be printed:

- PDF file (Version 1.7 or older)
- TIFF file (TIFF V6/TTN2 format)
- JPEG file
- XPS file
- OpenXPS file
- Encrypted PDF file

In addition, you can store scanned image files in USB memory connected to the machine.

The following file types can be stored:

- PDF file format
- TIFF file format
- JPEG file format
- XPS file format
- OpenXPS file format
- High-compression PDF file format

Printing Documents Stored in Removable USB Memory

NOTE

- PDF files you wish to print should have an extension (.pdf).
- Files to be printed should be saved no further down than the top 3 folder levels, including the root folder.
- Use USB memory properly formatted by this machine.
- Plug the USB memory directly into the USB Memory Slot.

1 Plug the USB memory.

Plug the USB memory into the USB Memory Slot.

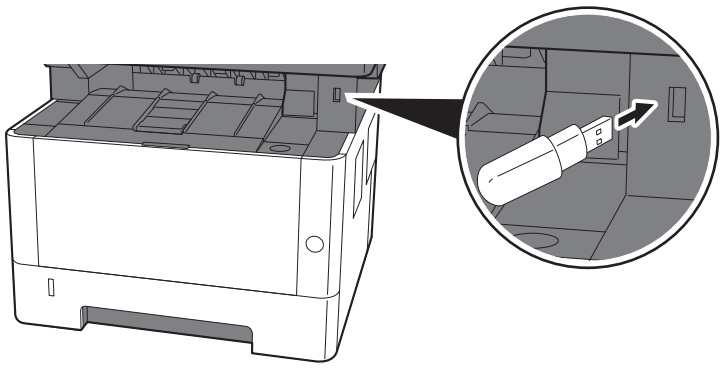

2 Display the screen.

[**Document Box/USB**] key > [▲] [▼] key > [**USB Memory**] > [**OK**] key

3 Print the document.

1 Select the folder containing the file to be printed, and select the [**OK**] key.

The machine will display documents in the top 3 folder levels, including the root folder.

NOTE

- 1,000 documents can be displayed.
- To return to a higher level folder, select the [**Back**] key.

2 Select the document you want to print, and [**Select**].

A checkmark will be placed on the right of the selected file.

Select the checkmarked file and select [**Select**] again to cancel the selection.

NOTE

Select [**Menu**] to perform the following operations.

- [**Select All**]: Select all files.
- [**Clear All**]: Cancel all the file selections.
- [**Detail**]: Display the details for the selected file.
- [**Memory Detail**]: Display the detail for the USB memory.
- [**Remove Memory**]: Remove the USB memory.

3 [**OK**] key > [▲] [▼] key > [**Print**] > [**OK**] key

4 Change the number of copies, etc. as desired.

For the features that can be selected, refer to the following:

Removable Memory (Store File, Printing Documents) (page 6-5)

5 Press the [**Start**] key.

Printing of the selected file begins.

Saving Documents to USB Memory (Scan to USB)

NOTE
The maximum number of the storable files is 1,000.

1 Place the originals.

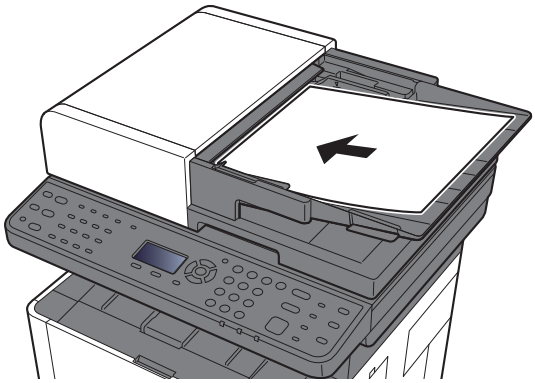

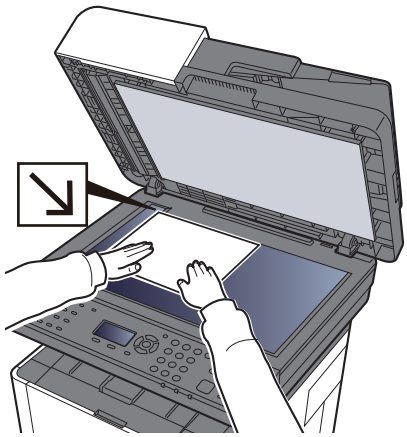

Loading Originals (page 5-2)

2 Plug the USB memory.

Plug the USB memory into the USB Memory Slot.

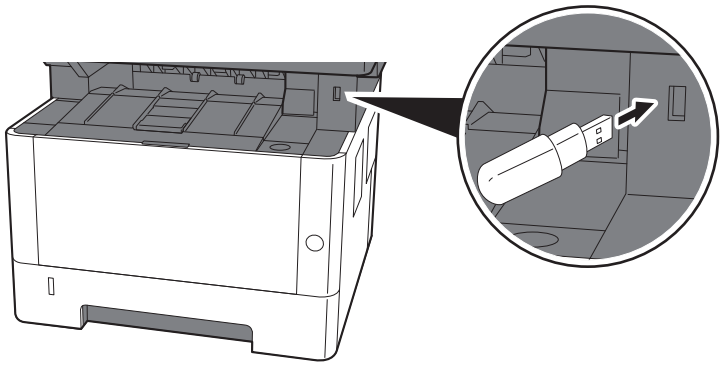

3 Display the screen.

[**Document Box/USB**] key > [▲] [▼] key > [**USB Memory**] > [**OK**] key

4 Store the document.

1 Select the folder where the file will be stored, and the [**OK**] key.

The machine will display the top 3 folder levels, including the root folder.

2 [▲] [▼] key > [**Store File**] > [**OK**] key

3 Set the type of original, file format, etc., as desired.

For the features that can be set, refer to the following:

Removable Memory (Store File, Printing Documents) (page 6-5)

4 Press the [**Start**] key.

The original is scanned and the data is stored in the USB memory.

Check the USB Memory Information

1 Display the screen.

[**Document Box/USB**] key > [▲] [▼] key > [**USB Memory**] > [**OK**] key > [**Menu**] > [▲] [▼] key > [**Memory Detail**] > [**OK**] key

2 Check the information.

Select the [►] key to view the next screen. Select the [◄] key to return to the previous screen.

Once you confirm the information, select the [**OK**] key.

Removing USB Memory

IMPORTANT

Be sure to follow the proper procedure to avoid damaging the data or USB memory.

1 Display the screen.

[**Reset**] key > [▲] [▼] key > [**USB Memory**] > [**OK**] key

2 Select [Remove Memory].

[**Menu**] > [▲] [▼] key > [**Remove Memory**] > [**OK**] key

3 Remove the USB memory.

When "USB memory can be safely removed." is displayed, select [**OK**] and then remove the USB memory.

NOTE

USB memory can also be removed after checking the status of the device.

Device/Communication (page 7-14)

6 Using Various Functions

This chapter explains the following topics:

Functions Available on the Machine 6-2
About Functions Available on the Machine 6-2
How to Select Functions 6-2
Copy 6-3
Send 6-4
Removable Memory (Store File, Printing Documents) 6-5
Functions 6-7
Paper Selection 6-8
Collate 6-9
Duplex 6-9
Zoom 6-11
Combine 6-13
Original Size 6-15
Original Orientation 6-15
Mixed Size Originals 6-16
Original Image 6-16
Density 6-17
EcoPrint 6-17
Continuous Scan 6-17
File Name Entry 6-18
Job Finish Notice 6-18
Priority Override 6-18
Color Selection 6-19
Sharpness 6-19
Contrast 6-20
Background Density Adj. (Background Density Adjustment) 6-20
Skip Blank Page 6-21
Scan Resolution 6-21
Sending Size 6-22
File Format 6-23
Subject/Body 6-27
FTP Encrypted TX 6-27
File Separation 6-27
Storing Size 6-28
Encrypted PDF 6-28
JPEG/TIFF Print 6-29
XPS Fit to Page 6-29

Functions Available on the Machine

About Functions Available on the Machine

This machine provides the various functions available.

How to Select Functions

To configure the settings for functions, select the [**Function Menu**] key.

Operation Method (page 2-13)

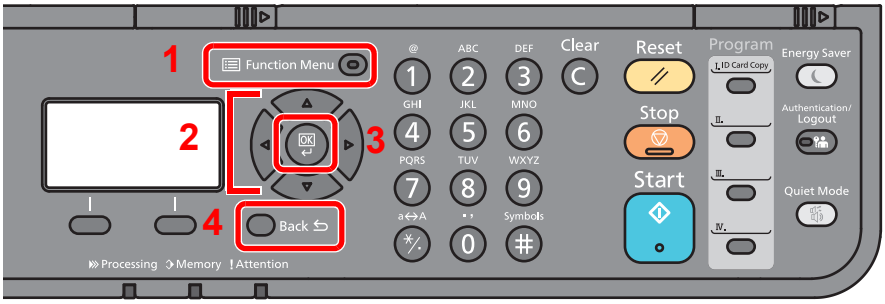

1 Displays the function menu.

2 Selects the item displayed or changes the numeric value.

3 Confirms the selected setting.

4 Cancels the current menu setting to return to the menu one level higher.

Copy

For details on each function, see the table below.

Key
Function Menu

Function	Description	Reference page
Paper Selection	Select the cassette or multipurpose tray that contains the required paper size.	page 6-8
Collate	Offsets the output by page or set.	page 6-9
Duplex	Produces two-sided prints.	page 6-9
Zoom	Adjust the zoom to reduce or enlarge the image.	page 6-11
Combine	Combines 2 or 4 original sheets into 1 printed page.	page 6-13
Original Size	Specify the original size to be scanned.	page 6-15
Orig. Orientation	Select the orientation of the original document top edge to scan correct direction.	page 6-15
Mixed Size Originals	Scan the documents of different sizes that are set in the document processor all at once.	page 6-16
Original Image	Select original image type for best results.	page 6-16
Density	Adjust density.	page 6-17
EcoPrint	EcoPrint saves toner when printing.	page 6-17
Continuous Scan	Scans a large number of originals in separate batches and then produce as one job.	page 6-17
File Name Entry	Adds a file name.	page 6-18
JobFinish Notice	Sends E-mail notice when a job is complete.	page 6-18
Priority Override	Suspends the current job and gives a new job top priority.	page 6-18
Sharpness	Adjusts the sharpness of image outlines.	page 6-19
Contrast	You can adjust the contrast between light and dark areas of the image.	page 6-20
Backgrnd Density	Removes dark background from originals, such as newspapers.	page 6-20
Skip Blank Page	When there are blank pages in a scanned document, this function skips the blank pages and prints only pages that are not blank.	page 6-21

Send

For details on each function, see the table below.

Key
Function Menu

Function	Description	Reference page
Color Selection	Select the color mode setting.	page 6-19
Original Size	Specify the original size to be scanned.	page 6-15
Original Image	Select original image type for best results.	page 6-16
Scan Resolution	Select fineness of scanning resolution.	page 6-21
Sending Size	Select size of image to be sent.	page 6-22
Zoom	Adjust the zoom to reduce or enlarge the image.	page 6-11
Orig. Orientation	Select the orientation of the original document top edge to scan correct direction.	page 6-15
Mixed Size Originals	Scan the documents of different sizes that are set in the document processor all at once.	page 6-16
Continuous Scan	Scans a large number of originals in separate batches and then produce as one job.	page 6-17
File Format	Specify the image file format. Image quality level can also be adjusted.	page 6-23
File Name Entry	Adds a file name.	page 6-18
Subject/Body	Adds subject and body when sending a document.	page 6-27
JobFinish Notice	Sends E-mail notice when a job is complete.	page 6-18
FAX Resolution	Select fineness of images when sending FAX.	Refer to the **FAX Operation Guide**.
FAX Delayed TX	Set a send time.	
FAX Direct TX	Sends FAX directly without reading original data into memory.	
FAX RX Polling	Dial the destination and receive documents for Polling Transmission stored in the polling box.	
FAX TX Report	Print a report of fax transmission results.	
Density	Adjust density.	page 6-17
FTP Encrypted TX	Encrypts images when sending via FTP.	page 6-27
File Separation	Creates several files by dividing scanned original data page by page, and sends the files.	page 6-27
Sharpness	Adjusts the sharpness of image outlines.	page 6-19
Contrast	You can adjust the contrast between light and dark areas of the image.	page 6-20
Backgrnd Density	Removes dark background from originals, such as newspapers.	page 6-20
Skip Blank Page	When there are blank pages in a scanned document, this function skips the blank pages and prints only pages that are not blank.	page 6-21

NOTE

Funtions that can be used with fax server transmission are as follows:

Original Size, Density, Original Image, FAX TX Resolution, Continuous Scan

Removable Memory (Store File, Printing Documents)

For details on each function, see the table below.

Store File

Key
Function Menu

Function	Description	Reference page
Color Selection	Select the color mode setting.	page 6-19
Original Size	Specify the original size to be scanned.	page 6-15
Original Image	Select original image type for best results.	page 6-16
Scan Resolution	Select fineness of scanning resolution.	page 6-21
Storing Size	Select size of image to be stored.	page 6-28
Zoom	Adjust the zoom to reduce or enlarge the image.	page 6-11
Orig. Orientation	Select the orientation of the original document top edge to scan correct direction.	page 6-15
Mixed Size Originals	Scan the documents of different sizes that are set in the document processor all at once.	page 6-16
Continuous Scan	Scans a large number of originals in separate batches and then produce as one job.	page 6-17
File Format	Specify the image file format. Image quality level can also be adjusted.	page 6-23
File Separation	Creates several files by dividing scanned original data page by page, and sends the files.	page 6-27
File Name Entry	Adds a file name.	page 6-18
JobFinish Notice	Sends E-mail notice when a job is complete.	page 6-18
Density	Adjust density.	page 6-17
Sharpness	Adjusts the sharpness of image outlines.	page 6-19
Contrast	You can adjust the contrast between light and dark areas of the image.	page 6-20
Backgrnd Density	Removes dark background from originals, such as newspapers.	page 6-20
Skip Blank Page	When there are blank pages in a scanned document, this function skips the blank pages and prints only pages that are not blank.	page 6-21

Printing Documents

Key
Function Menu

Function	Description	Reference page
Collate	Offsets the output by page or set.	page 6-9
Paper Selection	Select the cassette or multipurpose tray that contains the required paper size.	page 6-8
Duplex	Print a document on both sides of the paper.	page 6-10
EcoPrint	EcoPrint saves toner when printing.	page 6-17
File Name Entry	Adds a file name.	page 6-18
JobFinish Notice	Sends E-mail notice when a job is complete.	page 6-18
Priority Override	Suspends the current job and gives a new job top priority.	page 6-18
Encrypted PDF	Enter the preassigned password to print the PDF data.	page 6-28
JPEG/TIFF Print	Select the image size when printing JPEG or TIFF files.	page 6-29
XPS Fit to Page	Reduces or enlarges the image size to fit to the selected paper size when printing XPS file.	page 6-29

Functions

On pages that explain a convenient function, the modes in which that function can be used are indicated by icons.

Printing: 



Sending: 

Storing: 

Paper Selection

Copy Print from USB

Select the cassette or multipurpose tray that contains the required paper size.

If [**Auto**] is selected, the paper matching the size of the original is selected automatically.

NOTE

- Specify in advance the size and type of the paper loaded in the cassette.

Cassette 1 (to 3) Set. (Cassette 1 (to 3) Settings) (page 8-19)
MP Tray Set. (Multipurpose Tray Settings) (page 8-19)

- Cassettes 2 to 3 are displayed when the optional paper feeder is installed.

Before selecting [**MP Tray**], you need to select [**MP Tray Set.**] and specify the paper size and media type. The available paper sizes and media types are shown in the table below.

Item		Value	Description
Auto			The paper matching the size of the original is selected automatically.
Cassette 1 (to 3) *1			Feed paper from cassette 1 (to 3).
MP Tray			Feed paper from the multipurpose tray.
MP Tray Set.		—	Before selecting [**MP Tray**], you need to select [**MP Tray Set.**] and specify the paper size and media type.
	Standard Size	A4, A5-R, A5, A6, B5, B6, Folio, 216 × 340 mm, Letter, Legal, Statement, Executive, Oficio II, 16K, ISO B5, Envelope #10, Envelope #9, Envelope #6, Envelope Monarch, Envelope DL, Envelope C5, Hagaki (Cardstock), Oufuku Hagaki (Return postcard), Youkei 4, Youkei 2, Custom*2	Select from the standard sizes and custom size.
	Size Entry	Set the sizes of [**Y**] (vertical). Metric: 148 to 356 mm (in 1 mm increments) Inch: 5.83 to 14.02" (in 0.01" increments)	Enter the size not included in the standard size.*3 When you have selected [**Size Entry**], use [▲]/[▼] or the numeric keys to set the sizes of "X" (horizontal) and "Y" (vertical).
		Set the sizes of [**X**] (horizontal). Metric: 70 to 216 mm (in 1 mm increments) Inch: 2.76 to 8.50" (in 0.01" increments)	
	Media Type	Plain (60 to 105 g/m^2), Transparency, Rough, Vellum (60 to 220 g/m^2), Labels, Recycled,*4 Preprinted*4, Bond, Cardstock, Color, Prepunched*4, Letterhead*4, Envelope, Thick (106 to 220 g/m^2), High Quality, Custom 1 to 8*4	Select the media type. Displayed after [**Standard Size**] or [**Size Entry**] is set in [**MP Tray Set.**].

*1 Cassette 2 to Cassette 3 are displayed when the optional paper feeder is installed.

*2 For instructions on how to specify the custom paper sizes, refer to the following:

Custom PaperSize (page 8-17)

*3 The input units can be changed in System Menu.

Measurement (page 8-20)

*4 For instructions on how to specify the custom paper types 1 to 8, refer to the following:

Media Type Setting (page 8-20)

To print on preprinted or prepunched paper or on letterhead, refer to the following:

SpecialPaper Act. (page 8-18)

NOTE

- You can conveniently select in advance the size and type of paper that will be used often and set them as default.

MP Tray Set. (Multipurpose Tray Settings) (page 8-19)

- If the specified size of paper is not loaded in the paper source cassette or multipurpose tray, a confirmation screen appears. Load the required paper in the multipurpose tray and select [**OK**] to start copying.

Collate

Copy | Print from USB

Offsets the output by page or set.

(**Value**: [**Off**] / [**On**])

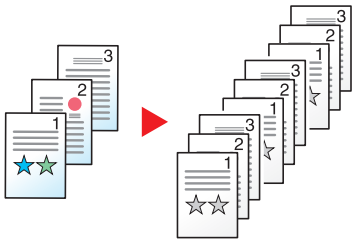

Duplex

Copy | Print from USB

Produces two-sided prints.

The following modes are available.

One-sided to Two-sided

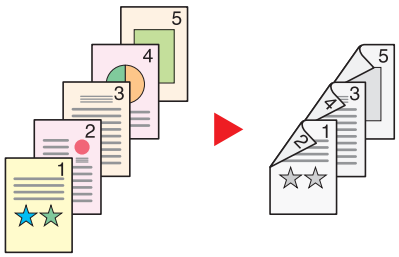

Original Copy

Produces two-sided copies from one-sided originals. In case of an odd number of originals, the back side of the last copy will be blank.

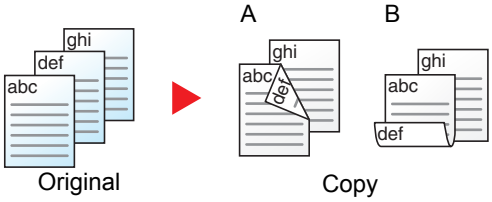

Original Copy

The following binding options are available.

A Binding Left/Right: Images on the second sides are not rotated.

B Binding Top: Images on the second sides are rotated 180 degrees. Copies can be bound on the top edge, facing the same orientation when turning the pages.

Copying

Prints 1-sided originals to 2-sided. Select the binding orientation for original and finished documents.

Item		Value	Description
1-sided>>1-sided		—	Disables the function.
1-sided>>2-sided		—	Select the [**OK**] key to copy the original with the default setting. For the default settings, refer to the following: Function Defaults (page 8-24)
	Finish. Binding	Left/Right, Top	Select [**Detail**] to display the [**Finish. Binding**] screen. Select the binding orientation of copies, and select the [**OK**] key.
	Orig. Orientation	Top Edge on Top, Top Edge on Left	Select the orientation of the original document top edge to scan correct direction. Choose orientation of the originals, either [**Top Edge on Top**] or [**Top Edge on Left**]. Then select the [**OK**] key.

When placing the original on the platen, consecutively replace each original and press the [**Start**] key.

After scanning all originals, select [**End Scan**] to start copying.

Printing

Print a document on both sides of the paper.

Item		Value	Description
1-sided		—	Disables the function.
2-sided		—	Select the [**OK**] key to print a 2-sided document with the default setting. For the default settings, refer to the following: Function Defaults (page 8-24)
	Finish. Binding	Left/Right, Top	Select [**Detail**] to display the [**Finish. Binding**] screen. Select the binding orientation of copies, and select the [**OK**] key.

Zoom

Copy Send Scan to USB

Adjust the zoom to reduce or enlarge the image.

Copying

The following zoom options are available.

Auto

Adjusts the image to match the paper size.

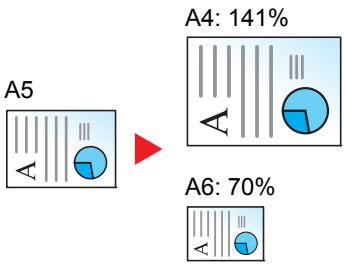

Standard Zoom

Reduces or enlarges at preset magnifications.*1

Model	Zoom Level (Original Copy)		Model	Zoom Level (Original Copy)	
Metric Models	400%	90% FOL >> A4	Inch Models	400%	78% LGL>>LTR
	200%	86% A4 >> B5		200%	64% LTR>>STMT
	141% A5 >> A4	70% A4 >> A5		129% STMT>>LTR	50%
	115% B5 >> A4	50%		100%	25%
	100%	25%			

*1 LTR=Letter
LGL=Legal
STMT=Statement
FOL=Folio

Others

Reduces or enlarges at magnifications other than the Standard Zoom.*1

Model	Zoom Level (Original Copy)		Model	Zoom Level (Original Copy)	
Metric Models	129% STMT>>LTR		Inch Models	141% A5 >> A4	86% A4 >> B5
	78% LGL>>LTR			115% B5 >> A4	70% A4 >> A5
	64% LTR>>STMT			90% FOL>>A4	

*1 LTR=Letter
LGL=Legal
STMT=Statement
FOL=Folio

Zoom Entry

Manually reduces or enlarges the original image in 1% increments between 25% and 400%. Use the numeric keys or select [▲] or [▼] to enter the any magnification.

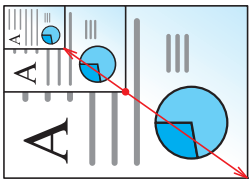

Sending/Storing

Item	Description
100%	Reproduces the original size.
Auto	Reduces or enlarges original to sending/storing size.

NOTE

To reduce or enlarge the image, select the paper size, sending size, or storing size.

Paper Selection (page 6-8)
Sending Size (page 6-22)
Storing Size (page 6-28)

Combine

Copy

Combines 2 or 4 original sheets into 1 printed page.

You can select the page layout and the type of boundary lines around the pages.

The following types of the boundary lines are available.



Select [**2 in 1**] or [**4 in 1**], select [**Detail**], and configure the function.

Item		Value	Description
Off		—	Disables the function.
2 in 1		—	Select the [**OK**] key to copy the original with the default setting. For the default settings, refer to the following: ➡ Function Defaults (page 8-24)
	2 in 1 Layout	L to R T to B, R to L, B to T	Select the page layout of scanned originals, and select the [**OK**] key.
	Border Line	None, Solid Line, Dotted Line, Positioning Mark	Select the page boundary line, and select the [**OK**] key.
	Orig. Orientation	Top Edge on Top, Top Edge on Left	Select the orientation of the original document top edge to scan correct direction. Choose orientation of the originals, either [**Top Edge on Top**] or [**Top Edge on Left**]. Then select the [**OK**] key.
4 in 1		—	Select the [**OK**] key to copy the original with the default setting. For the default settings, refer to the following: ➡ Function Defaults (page 8-24)
	4 in 1 Layout	Right then Down, Down then Right, Left then Down, Down then Left	Select the page layout of scanned originals, and select the [**OK**] key.
	Border Line	None, Solid Line, Dotted Line, Positioning Mark	Select the page boundary line, and select the [**OK**] key.
	Orig. Orientation	Top Edge on Top, Top Edge on Left	Select the orientation of the original document top edge to scan correct direction. Choose orientation of the originals, either [**Top Edge on Top**] or [**Top Edge on Left**]. Then select the [**OK**] key.

Layout image

Item		Image
2 in 1	L to R/T to B	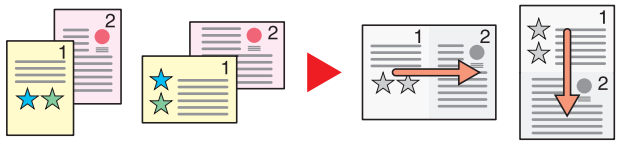
	R to L/B to T	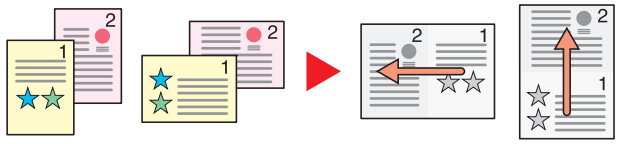
4 in 1	Right then Down	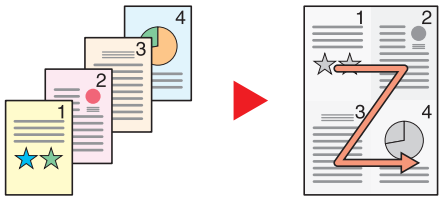
	Left then Down	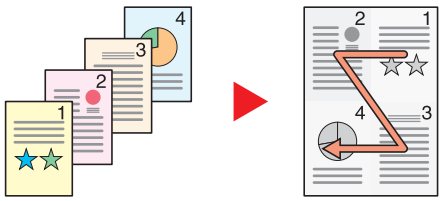
	Down then Right	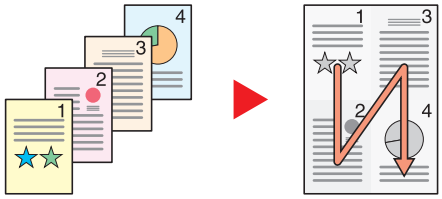
	Down then Left	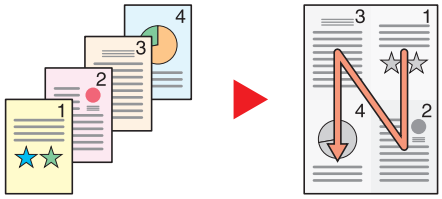

NOTE

- The paper sizes supported in Combine mode: A4, A5-R, B5, Folio, 216 × 340 mm, Letter, Legal, Statement, Oficio II, 16K
- When placing the original on the platen, be sure to copy the originals in page order.

Original Size

Copy Send Scan to USB

Specify the original size to be scanned.

Item	Description
Auto (DP)[*1], A4, A5, A6, B5, B6, Folio, 216 × 340 mm, Letter, Legal[*2], Statement, Executive, Oficio II, 16K, ISO B5, Envelope #10, Envelope #9, Envelope #6, Envelope Monarch, Envelope DL, Envelope C5, Hagaki (Cardstock), Oufuku Hagaki (Return postcard), Youkei 4, Youkei 2, Custom[*3]	Select from standard sizes and custom size.

*1 This function is displayed when [**Auto Detect**] in [**Detect Orig.(DP)**] is set to [**On**].
Detect Orig.(DP) (page 8-16)
*2 In regions other than North America, the original can only be placed in the document feeder.
*3 For instructions on how to specify the custom original size, refer to the following:
Custom Orig. Size (page 8-16)

NOTE
Be sure to always specify the original size when using custom size original.

Original Orientation

Copy Send Scan to USB

Select the orientation of the original document top edge to scan correct direction.
To use any of the following functions, the document's original orientation must be set.

- Duplex (Copy only)
- Combine

Select original orientation from [**Top Edge on Top**] or [**Top Edge on Left**].

Item	Image
Top Edge on Top	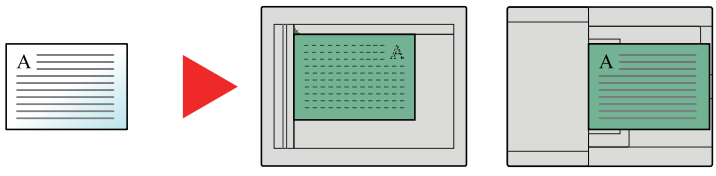 Original Original orientation
Top Edge on Left	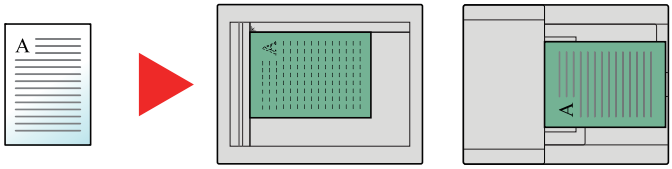 Original Original orientation

NOTE
The default setting for Original Orientation can be changed.
Original Orientation (page 8-24)

Mixed Size Originals

Copy Send Scan to USB

Scan the documents of different sizes that are set in the document processor all at once.

This function cannot be used if platen is used.

(**Value**: [**Off**] / [**On**])

Supported Combinations of Originals

Legal and Letter (Folio and A4)

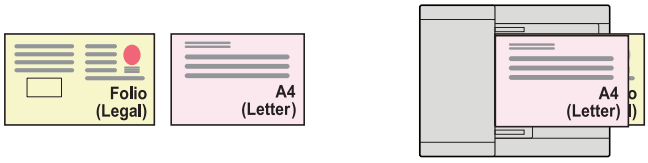

Original Image

Copy Send Scan to USB

Select original image type for best results.

Copying

Item	Description
Text+Photo[*1]	Best for mixed text and photo documents.
Photo	Best for photos taken with a camera.
Text	Best for documents that are mostly text.
Graphic/Map	Best for graphics and maps.

*1 If gray text is not printed completely using [**Text + Photo**], selecting [**Text**] may improve the result.

Sending/Storing

Item	Description
Text+Photo	Best for mixed text and photo documents.
Photo	Best for photos taken with a camera.
Text	Best for documents that are mostly text.
For OCR[*1]	Scanning produces an image that is suitable for OCR.
Light Text/Fine Line	Clearly reproduces faint characters written in pencil, etc., and thin lines on map originals or diagrams.

*1 This function is only available when "Color Selection" is set to [**Black & White**]. For details, refer to the following:
➡ Color Selection (page 6-19)

Density

Copy Send Scan to USB

Adjust density.

(**Value**: [**-4**] to [**+4**] (Lighter to Darker))



EcoPrint

Copy Print from USB

EcoPrint saves toner when printing.

Use this function for test prints or any other occasion when high quality print is not required.

(**Value**: [**Off**] / [**On**])



Continuous Scan

Copy Send Scan to USB

Scans a large number of originals in separate batches and then produce as one job.

Originals will be scanned continuously until you select [**End Scan**].

(**Value**: [**Off**] / [**On**])

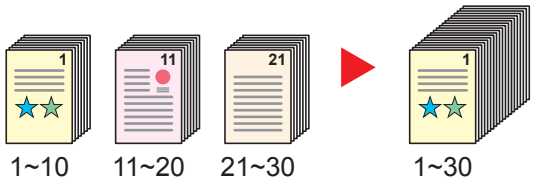

File Name Entry



Adds a file name.

Additional information such as job number and date and time can also be set. You can check a job history or job status using the file name, date and time, or job number specified here.

Enter the file name (up to 32 characters), and select [**OK**].

To add date and time, select [**Date**] and the [**OK**] key. To add job number, select [**Job No.**] and the [**OK**] key. To add both, select [**Job No. + Date**] or [**Date + Job No.**] and the [**OK**] key.

Job Finish Notice



Sends E-mail notice when a job is complete.

Users can be notified of the completion of a job while working at a remote desk, saving the time spent waiting beside the machine to finish.

NOTE

PC should be configured in advance so that E-mail can be used.

Command Center RX (page 2-39)

E-mail can be sent to a single destination.

Item		Description
Off		Disables the function.
On	**Address Book**	Select the notification destination from the Address Book or External Address Book*1. Select the destination on the Address Book or Ext Address Book screen, then select the [**OK**] key.
	Address Entry	Enter E-mail address directly. Enter the address (up to 128 characters) and select the [**OK**] key.

*1 For details on the External Address Book, refer to the following:
Command Center RX User Guide

Priority Override



Suspends the current job and gives a new job top priority.

The suspended job resumes after the other job is finished.

(**Value**: [**Off**] / [**On**])

NOTE

- This function is not available if current job was an override.
- Priority override may not be available depending on the status of the current print job and memory usage.

Color Selection

Send Scan to USB

Select the color mode setting.

Item	Description
Auto (Color/Gray)	Automatically recognizes whether the document is color or black and white, and scan color documents in Full Color and black and white documents in Grayscale.
Auto (Color/B & W)	Automatically recognizes whether the document is color or black and white, and scan color documents in Full Color and black and white documents in Black and White.
Full Color	Scans the document in full color.
Grayscale	Scans the document in grayscale. Produces a smooth, detailed image.
Black & White	Scans the document in black and white.

Sharpness

Copy Send Scan to USB

Adjusts the sharpness of image outlines.

When copying penciled originals with rough or broken lines, clear copies can be taken by adjusting sharpness toward "Sharpen". When copying images made up of patterned dots such as magazine photos, in which moire*1 patterns appear, edge softening and weakening of the moire effect can be obtained by setting the sharpness toward "Blur".

Less Sharp **Original** **More Sharp**

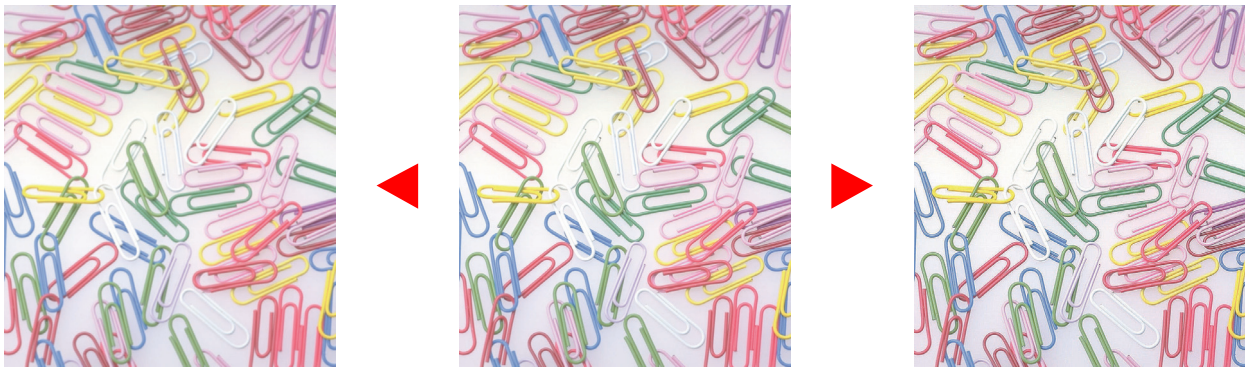

Item	Description
[1] to [3] (Sharpen)	Emphasizes the image outline.
[-1] to [-3] (Blur)	Blurs the image outline. Can weaken a Moire*1 effect.

*1 Patterns that are created by irregular distribution of halftone dots.

Contrast

Copy Send Scan to USB

You can adjust the contrast between light and dark areas of the image.

Lower **Original** **Higher**



Item	Description
[1] to [4]	Increases the sharpness of colors.
[-1] to [-4]	Creates smoother colors.

Background Density Adj. (Background Density Adjustment)

Copy Send Scan to USB

Removes dark background from originals, such as newspapers.

If the ground color is obtrusive, select [**Auto**]. If [**Auto**] does not remove the ground color, select [**Manual**] and adjust the density of the ground color.

Item	Description
Off	Does not adjust the ground color.
Auto	Automatically adjusts the background density based on the original.
Manual	Select [**1**] to [**5**] (Lighter - Darker) to adjust the background density manually.

Skip Blank Page

Copy Send Scan to USB

When there are blank pages in a scanned document, this function skips the blank pages and prints only pages that are not blank.

When set to [**High**], the level at which blank paper is recognized is higher.

The machine detects blank pages, saving unnecessary printing without the need to check for blank pages in the document.

Select [**On**], [**Level**], and then [**Low**], [**Middle**] or [**High**].

NOTE

The originals with punched holes or originals printed on a colored substrate may not be recognized as blank pages.

Scan Resolution

Send Scan to USB

Select fineness of scanning resolution.

(**Value**: [**200 × 100dpi Norm**] / [**200 × 200dpi Fine**] / [**200 × 400dpi S.Fin**] / [**300 × 300dpi**] / [**400 × 400dpi U.Fin**] / [**600 × 600dpi**])

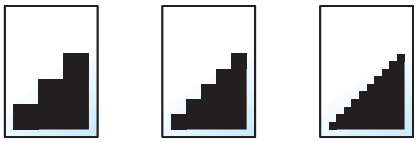

NOTE

The larger the number, the better the image resolution. However, better resolution also means larger file sizes and longer send times.

Sending Size

Send

Select size of image to be sent.

Item	Description
Same as OrigSize	Send an image the same size as the original.
A4, A5, A6, B5, B6, Folio, 216 × 340 mm, Letter, Legal, Statement, Executive, Oficio II, 16K, ISO B5, Envelope #10, Envelope #9, Envelope #6, Envelope Monarch, Envelope DL, Envelope C5, Hagaki (Cardstock), Oufuku Hagaki (Return postcard), Youkei 4, Youkei 2	Select from standard sizes.

Relationship between Original Size, Sending Size, and Zoom

Original Size, Sending Size and Zoom are related to each other. For details, see the table below.

Original size and sending size are	the same	different
Original Size (page 6-15)	Specify as necessary.	Specify as necessary.
Sending Size	Select [**Same as Original Size**].	Select the desired size.
Zoom (page 6-11)	Select [**100%**] (or [**Auto**]).	Select [**Auto**].

NOTE

When you specify the sending size that is different from the original size, and select the zoom of [**100%**], you can send the image as the actual size (No Zoom).

File Format

Send Scan to USB

Specify the image file format. Image quality level can also be adjusted.

Select the file format from [**PDF**], [**TIFF**], [**JPEG**], [**XPS**], [**OpenXPS**], and [**High Comp. PDF**].

When the color mode in scanning has been selected for Grayscale or Full Color, set the image quality.

If you selected [**PDF**] or [**High Comp. PDF**], you can specify encryption or PDF/A settings.

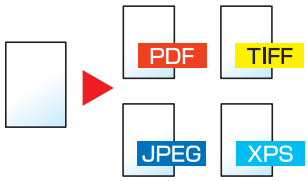

Item		Value	Description
PDF		—	Select the [**OK**] key to save or send a PDF file. The image quality and PDF/A settings will be the default settings. For the default settings, refer to the following: Function Defaults (page 8-24)
	Image Quality	1 Low(High Comp) to 5 High(Low Comp)	Select [**Detail**] to display the [**Image Quality**] screen. Select the image quality and select the [**OK**] key.
	Encryption	Off, On	Set the PDF encryption and then select the [**OK**] key. If [**On**] is selected, refer to the following: PDF Encryption Functions (page 6-25)
	PDF/A	Off, PDF/A-1a, PDF/A-1b	Select PDF/A-1 format type and select the [**OK**] key.
TIFF		—	Select the [**OK**] key to save or send a TIFF file. The Image Quality settings will be the default values. For the default settings, refer to the following: Function Defaults (page 8-24)
	Image Quality	1 Low(High Comp) to 5 High(Low Comp)	Select [**Detail**] to display the [**Image Quality**] screen. Select the image quality and select the [**OK**] key.
XPS		—	Select the [**OK**] key to save or send a XPS file. The Image Quality settings will be the default values. For the default settings, refer to the following: Function Defaults (page 8-24)
	Image Quality	1 Low(High Comp) to 5 High(Low Comp)	Select [**Detail**] to display the [**Image Quality**] screen. Select the image quality and select the [**OK**] key.
OpenXPS		—	Select the [**OK**] key to save or send a OpenXPS file. The Image Quality settings will be the default values. For the default settings, refer to the following: Function Defaults (page 8-24)
	Image Quality	1 Low(High Comp) to 5 High(Low Comp)	Select [**Detail**] to display the [**Image Quality**] screen. Select the image quality and select the [**OK**] key.

Item		Value	Description
JPEG		—	Select the [**OK**] key to save or send a JPEG file. The Image Quality settings will be the default values. For the default settings, refer to the following: ➡ Function Defaults (page 8-24)
	Image Quality	1 Low(High Comp) to 5 High(Low Comp)	Select [**Detail**] to display the [**Image Quality**] screen. Select the image quality and select the [**OK**] key.
High Comp. PDF		—	Select the [**OK**] key to save or send a High Comp. PDF file. The image quality and PDF/A settings will be the default settings. For the default settings, refer to the following: ➡ Function Defaults (page 8-24)
	Image Quality	Comp. Priority, Standard, Quality Priority	Select [**Detail**] to display the [**Image Quality**] screen. Select the image quality and select the [**OK**] key.
	Encryption	Off, On	Set the PDF encryption and then select the [**OK**] key. If [**On**] is selected, refer to to the following: ➡ PDF Encryption Functions (page 6-25)
	PDF/A	Off, PDF/A-1a, PDF/A-1b	Select PDF/A-1 format type and select the [**OK**] key.

NOTE

If encryption is enabled, PDF/A settings cannot be specified.

PDF Encryption Functions

If you have selected PDF or High Comp. PDF for file format, you can restrict the access level for displaying, printing, and editing PDF's by assigning a secure password.

Select [**PDF**] or [**High Comp. PDF**], and select [**On**] of [**Encryption**] in [**Detail**].

Items that can be set vary depending on the setting selected in [**Compatibility**].

Acrobat3.0&Later

Item			Value	Description
Password	**Open Document**		Off, On	Enter the password to open the PDF file. Select [**On**] and select the [**OK**] key. Enter a password (up to 256 characters) and then select the [**OK**] key. Enter the password again for confirmation, and select the [**OK**] key.
	Edit/Print Doc.		Off, On	Enter the password to edit the PDF file. Select [**On**] and select the [**OK**] key. Enter a password (up to 256 characters) and then select the [**OK**] key. Enter the password again for confirmation, and select the [**OK**] key.
		Printing Allowed	Not Allowed, Allowed	Restricts printing of the PDF file. Then select the [**OK**] key.
		Changes Allowed	Not Allowed, Commenting, Page Layout, Any Changes	Restricts editing of the PDF file. Select from the following restrictions then select the [**OK**] key. Not Allowed: Disables the change to the PDF file. Commenting: Can only add commenting. Page Layout: Can change the page layout except extracting the pages of the PDF file. Any Changes: Can conduct all operations except extracting the pages of the PDF file.
		Copying Contents	Disable, Enable	Restricts the copying of text and objects on the PDF file. Then select the [**OK**] key.

Acrobat5.0&Later

Item			Value	Description
Password	**Open Document**		Off, On	Enter the password to open the PDF file. Select [**On**] and select the [**OK**] key. Enter a password (up to 256 characters) and then select the [**OK**] key. Enter the password again for confirmation, and select the [**OK**] key.
	Edit/Print Doc.		Off, On	Enter the password to edit the PDF file. Select [**On**] and select the [**OK**] key. Enter a password (up to 256 characters) and then select the [**OK**] key. Enter the password again for confirmation, and select the [**OK**] key.
		Printing Allowed	Not Allowed, Allowed (Low Res.), Allowed	Restricts printing of the PDF file. Select from the following restrictions then select the [**OK**] key. Not Allowed: Disables the printing of PDF file. Allowed (Low Res.): Can print the PDF file only in low resolution. Allowed: Can print the PDF file in original resolution.
		Changes Allowed	Not Allowed, Ins./Del./Rotat, Commenting, Any Changes	Specifically limit the operation. Select from the following restrictions then select the [**OK**] key. Not Allowed: Disables the change to the PDF file. Ins./Del./Rotat: Can only insert, delete, and rotate the pages of the PDF file. Commenting: Can only add commenting. Any Changes: Can conduct all operations except extracting the pages of the PDF file.
		Copying Contents	Disable, Enable	Restricts the copying of text and objects on the PDF file. Then select the [**OK**] key.

Subject/Body

Send

Adds subject and body when sending a document.

Select [**Subject**] / [**Body**] to enter the E-mail subject/body.

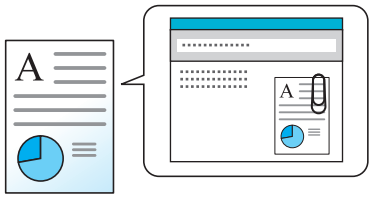

NOTE

The subject can include up to 60 characters, and the body can include up to 500 characters.

FTP Encrypted TX

Send

Encrypts images when sending via FTP.

Encryption secures the document transmission.

(**Value**: [**Off**] / [**On**])

NOTE

Click [**Security Settings**], and then [**Network Security**] in the Command Center RX. Be sure that "SSL" of Secure Settings is "On" and one or more effective encryption are selected in Client side settings.

Command Center RX User Guide

File Separation

Send Scan to USB

Creates several files by dividing scanned original data page by page, and sends the files.

(**Value**: [**Off**] / [**Each Page**])

Select [**Each Page**] to set File Separation.

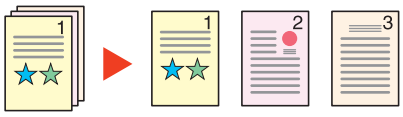

NOTE

A three-digit serial number such as "abc_001.pdf, abc_002.pdf..." is attached to the end of the file name.

Storing Size

Scan to USB

Select size of image to be stored.

Item	Description
Same as OrigSize	Store an image the same size as the original.
A4, A5, A6, B5, B6, Folio, 216 × 340 mm, Letter, Legal, Statement, Executive, Oficio II, 16K, ISO B5, Envelope #10, Envelope #9, Envelope #6, Envelope Monarch, Envelope DL, Envelope C5, Hagaki (Cardstock), Oufuku Hagaki (Return postcard), Youkei 4, Youkei 2	Select from standard sizes.

Relationship between Original Size, Storing Size, and Zoom

Original Size, Storing Size and Zoom are related to each other. For details, see the table below.

Original Size and the size you wish to store as are	the same	different
Original Size (page 6-15)	Specify as necessary.	Specify as necessary.
Storing Size	Select [**Same as Original Size**].	Select the desired size.
Zoom (page 6-11)	Select [**100%**] (or [**Auto**]).	Select [**Auto**].

NOTE

When you select Storing Size that is different from Original Size, and select the Zoom [**100%**], you can store the image as the actual size (No Zoom).

Encrypted PDF

Print from USB

Enter the preassigned password to print the PDF data.

Enter the Password, and select [**OK**].

NOTE

For details on entering the password, refer to the following:

Character Entry Method (page 11-8)

JPEG/TIFF Print

Print from USB

Select the image size when printing JPEG or TIFF files.

(**Value**: [**Paper Size**] / [**Image Resolution**] / [**Print Resolution**])

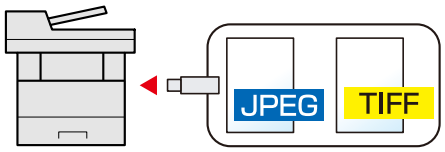

Item	Description
Paper Size	Fits the image size to the selected paper size.
Image Resolution	Prints at resolution of the actual image.
Print Resolution	Fits the image size to the print resolution.

XPS Fit to Page

Print from USB

Reduces or enlarges the image size to fit to the selected paper size when printing XPS file.

(**Value**: [**Off**] / [**On**])

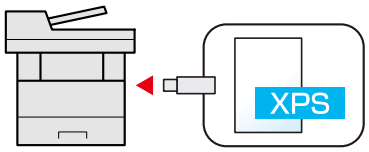

7 Status/Job Cancel

This chapter explains the following topics:

Checking Job Status 7-2
Details of the Status Screens 7-4
Checking Job History 7-8
Sending the Log History 7-12
Job Operation 7-13
Pause and Resumption of Jobs 7-13
Canceling of Jobs 7-13
Device/Communication 7-14
Checking the Remaining Amount of Toner and Paper (Paper/Supplies) 7-15

Checking Job Status

Check the status of jobs being processed or waiting to be printed.

Available Status Screens

The processing and waiting statuses of jobs are displayed as a list on the message display in four different screens - Printing Jobs, Sending Jobs, Storing Jobs, and Scheduled Jobs.

The following job statuses are available.

Status Display	Job status to be displayed
Print Job Status	• Copy • Printer • FAX reception • E-mail reception • Printing from Document Box • Printing data from removable memory • Job Report/List
Send Job Status	• FAX transmission • E-mail • Folder transmission • Application • Multiple destination • Fax server transmission
Store Job Status	• Scan • FAX • Printer
Scheduled Job	• Sending Job FAX using Delayed transmission

Displaying Status Screens

1 Display the screen.

[**Status/Job Cancel**] key > [▲] [▼] key > [**Print Job Status**], [**Send Job Status**], [**Store Job Status**] or [**Scheduled Job**] > [**OK**] key

2 Select the job you want to check.

1 Select the job you want to check, and [**Menu**].

2 [▲] [▼] key > [**Detail**] > [**OK**] key

Jobs Detail Status is displayed.

NOTE

- If a FAX job is selected in [**Send Job Status**] then [**PriorityOverride**] is displayed. Select [**PriorityOverride**] and select the [**OK**] key to suspend the current job and gives the selected job top priority.
- For [**Scheduled Job**], [**Start Now**] is displayed. Select [**Start Now**] and select the [**OK**] key to send the selected job immediately.

3 Check the status.

Select the [►] key to view the next screen. Select the [◄] key to return to the previous screen.

Print Job Status (page 7-4)
Send Job Status (page 7-5)
Store Job Status (page 7-6)
Scheduled Job Status (page 7-7)

Details of the Status Screens

NOTE

You can show the job statuses of all users, or only the statuses of your own jobs.

Disp. Status/Log (page 8-27)

This setting can also be changed from Command Center RX.

Command Center RX User Guide

Print Job Status

Item	Description
Status	Status of job [**Processing**]: The status before starting to print. [**Pause**]: Pausing print job or error [**Canceling**]: Canceling the job [**-----**]: The job is finished.
Accepted Time	Accepted Time of job
Job Name	When the job name in Job Name is displayed in a short form, select [**Detail**] to see the complete job name. Select the [**OK**] key to return to the previous screen.
Job Type	[**Copy**]: Copy job [**FAX**]*1: FAX reception [**Box**]: Job from Document Box [**Printer**]: Printer job [**Report**]: Report/List [**E-mail**]: E-mail reception [**USB**]: Data from removable memory
User Name	User Name for the executed job If user login administration is disabled, [**----**] appears.
Page and Copy	• Number of pages printed • Number of copies printed / Total number of copies to be printed
Original Pages	Number of original pages
Sender Info.	The sender information is displayed. **When receiving a FAX** If the name of the sender is provided when receiving a FAX, the name is displayed. If only the number of the sender is provided, the number is displayed. If there is no information about the sender or if a FAX is not received, [**----**] appears. **For E-mails** The E-mail address is displayed. In other cases, [**----**] is displayed. **NOTE** When the sender information is displayed in a short form, select [**Detail**] to see the complete sender Information. Select the [**OK**] key to return to the previous screen.

*1 Displayed only on products with the fax function installed.

Send Job Status

Item	Description
Status	Status of job [**Processing**]: The status before starting sending such as during scanning originals [**Pause**]: Pausing the job [**Canceling**]: Canceling the job
Accepted Time	Accepted Time of job
Job Name	When the job name in Job Name is displayed in a short form, select [**Detail**] to see the complete job name. Select the [**OK**] key to return to the previous screen.
Job Type	[**FAX**]*1: Sending Job FAX [**E-mail**]: Sending Job E-mail [**Folder**]: Sending Job Folder (SMB/FTP) [**Application**]: Sending Job Application [**Multi**]: Multi Sending [**Fax server**]: Fax server transmission
User Name	User Name for the executed job If user login administration is disabled, [**----**] appears.
Original Pages	Number of original pages
Color/B & W	Color mode [**Color/B & W**] [**Full Color**] [**Black & White**] [**Grayscale**] [**Mixed**] [**Auto (Color/Gray)**] [**Auto (Color/B & W)**]
Destination	The destination is displayed. **If there is one destination:** Destination (Either destination name, FAX number, E-mail address, or server name) **NOTE** When the destination is displayed in a short form, select [**Detail**] to see the complete destination. Select the [**OK**] key to return to the previous screen. **If there are multiple destinations:** [**Broadcast**] is displayed. When [**List**] is selected, all destinations are displayed. Select [**Exit**] to return to the original screen. **NOTE** When the destination in a short form, select the destination and then select the [**OK**] key to see the complete destination. Select the [**OK**] key to return to the previous screen.

*1 Displayed only on products with the fax function installed.

Store Job Status

Item	Description
Status	Status of job [**Processing**]: The status before starting sending such as during scanning originals [**Canceling**]: Canceling the job
Accepted Time	Accepted Time of job
Job Name	When the job name in Job Name is displayed in a short form, select [**Detail**] to see the complete job name. Select the [**OK**] key to return to the previous screen.
Job Type	[**FAX**]*1: Storing Job FAX [**SCAN**]: Storing Job Scan [**Printer**]: Storing Job Printer
User Name	User Name for the executed job If user login administration is disabled, [**----**] appears.
Original Pages	Number of original pages
Color/B & W	Color mode [**Color/B & W**] [**Full Color**] [**Black & White**] [**Grayscale**] [**Mixed**] [**Auto (Color/Gray)**] [**Auto (Color/B & W)**]
Sender Info.	The sender information is displayed. **When receiving a FAX** If the name of the sender is provided when receiving a FAX, the name is displayed. If only the number of the sender is provided, the number is displayed. If there is no information about the sender or if a FAX is not received, [**----**] appears. In other cases, [**----**] is displayed. **NOTE** When the sender Information is displayed in a short form, select [**Detail**] to see the complete sender Information. Select the [**OK**] key to return to the previous screen.

*1 Displayed only on products with the fax function installed.

Scheduled Job Status

Item	Description
Status	Status of job [**Waiting**]: Waiting Sending
Start Time	Time to start the scheduled job
Job Name	When the job name in Job Name is displayed in a short form, select [**Detail**] to see the complete job name. Select the [**OK**] key to return to the previous screen.
Job Type	[**FAX**] is displayed.
User Name	User Name for the executed job If user login administration is disabled, [**----**] appears.
Original Pages	Number of original pages
Color/B & W	Color mode [**Black & White**]
Destination	The destination is displayed. Destination (page 7-5)

Checking Job History

NOTE

- Job history is also available by Command Center RX or KYOCERA Net Viewer from the computer.

Command Center RX User Guide
KYOCERA Net Viewer User Guide

- You can show the job log of all users, or only your own job log.

Disp. Status/Log (page 8-27)

This setting can also be changed from Command Center RX.

Command Center RX User Guide

Available Job History Screens

The job histories are displayed separately in four screens - Printing Jobs, Sending Jobs, Storing Jobs, and FAX Jobs. The following job histories are available.

Screen	Job histories to be displayed
Print Job Log	• Copy • Printer • FAX reception • E-mail reception • Printing from Document Box • Job Report/List • Printing data from removable memory • Application
Send Job Log	• FAX • E-mail • Folder • Application • Multiple destination • Fax server transmission
Store Job Log	• Scan • FAX • Printer
FAX Job Log	**FAX Operation Guide**

Displaying Job History Screen

1 Display the screen.

[**Status/Job Cancel**] key > [▲] [▼] key > [**Print Job Log**], [**Send Job Log**], [**Store Job Log**] or [**FAX Job Log**] > [**OK**] key

NOTE

For [**FAX Job Log**], refer to the following:

FAX Operation Guide

2 Select the job you want to check.

Select the job you want to check, and [**Detail**].

A job result icon is displayed on the extreme right of each job.

- OK: The job has been completed.
- ⚠: An error has occurred.
- ⊘: The job has been canceled.

NOTE

You can show the job log of all users, or only your own job log.

Disp. Status/Log (page 8-27)

This setting can also be changed from Command Center RX.

Command Center RX User Guide

3 Check the job history.

Select the [►] key to view the next screen. Select the [◄] key to return to the previous screen.

Print Job Log (page 7-10)
Send Job Log (page 7-11)
Store Job Log (page 7-12)

Print Job Log

Item	Description
Result	Result of job [**OK**]: The job has been completed. [**Error**]: An error has occurred. [**Cancel**]: The job has been canceled.
Accepted Time	Accepted Time of job
End Time	Completed time of job
Job Name	When the job name in Job Name is displayed in a short form, select [**Detail**] to see the complete job name. Select the [**OK**] key to return to the previous screen.
Job Type	[**Copy**]: Copy job [**FAX**]*1: FAX reception [**Box**]: Job from Document Box [**Printer**]: Printer job [**Report**]: Report/List [**E-mail**]: E-mail reception [**USB**]: Data from removable memory
User Name	User Name for the executed job If user login administration is disabled, [**----**] appears.
Page and Copy	• Number of pages printed • Number of copies printed / Total number of copies to be printed
Original Pages	Number of original pages
Sender Info.	The sender information is displayed. Sender Info. (page 7-4)

*1 Displayed only on products with the fax function installed.

Send Job Log

Item	Description
Result	Result of job [**OK**]: The job has been completed. [**Error**]: An error has occurred. [**Cancel**]: The job has been canceled.
Accepted Time	Accepted Time of job
End Time	Completed time of job
Job Name	When the job name in Job Name is displayed in a short form, select [**Detail**] to see the complete job name. select the [**OK**] key to return to the previous screen.
Job Type	[**E-mail**]: Sending Job E-mail [**Folder**]: Sending Job Folder (SMB/FTP) [**FAX**]*1: Sending Job FAX [**Application**]: Sending Job Application [**Multi**]: Multi Sending [**Fax server**]: Fax server transmission
User Name	User Name for the executed job If user login administration is disabled, [**----**] appears.
Original Pages	Number of original pages
Color/B & W	Color mode [**Color/B & W**] [**Full Color**] [**Black & White**] [**Grayscale**] [**Mixed**]
Destination	The destination is displayed. Destination (page 7-5)

*1 Displayed only on products with the fax function installed.

NOTE

If the login user name entry screen appears during operations, log in by referring to the following:

Login (page 2-15)

The factory default login user name and login password are set as shown below.

Model Name	Login User Name	Login Password
ECOSYS M2235dn/ECOSYS M2735dn	3500	3500

Store Job Log

Item	Description
Result	Result of job [**OK**]: The job has been completed. [**Error**]: An error has occurred. [**Cancel**]: The job has been canceled.
Accepted Time	Accepted Time of job
End Time	Completed time of job
Job Name	When the job name in Job Name is displayed in a short form, select [**Detail**] to see the complete job name. Select the [**OK**] key to return to the previous screen.
Job Type	[**FAX**]*1: Storing Job FAX [**SCAN**]: Storing Job Scan [**Printer**]: Storing Job Printer
User Name	User Name for the executed job If user login administration is disabled, [**----**] appears.
Original Pages	Number of original pages
Color/B & W	Color mode [**Color/B & W**] [**Full Color**] [**Black & White**] [**Grayscale**] [**Mixed**]
Sender Info.	The sender information is displayed. Sender Info. (page 7-6)

*1 Displayed only on products with the fax function installed.

Sending the Log History

You can send the log history by E-mail. You can either send it manually as needed or have it sent automatically whenever a set number of jobs is reached.

Send History (page 8-6)

Job Operation

Pause and Resumption of Jobs

Pause/resume all printing jobs in printing/waiting.

1 Display the screen.

Select the [**Status/Job Cancel**] key.

2 Select [Pause].

Printing is paused.

When resuming the printing of jobs that have been paused, select [**Resume**].

> **NOTE**
> If the [**Back**] key or other function key, such as the [**Copy**] key, is selected during Pause, "Resume paused jobs. Are you sure?" appears. If [**Yes**] is selected and then the [**OK**] key is selected, the job is resumed and the following screen appears. If [**No**] is selected and then the [**OK**] key is selected, the following screen appears while the job is paused.

Canceling of Jobs

A job in printing/waiting status can be canceled.

1 Display the screen.

[**Status/Job Cancel**] key > [▲] [▼] key > [**Print Job Status**], [**Send Job Status**], [**Store Job Status**] or [**Scheduled Job**] > [**OK**] key

2 Cancel a job.

Print Job Status

1 Select the job to be canceled, and [**Menu**].

2 [▲] [▼] key > [**Cancel Job**] > [**OK**] key > [**Yes**]

> **NOTE**
> When FAX reception job is selected, [**Cannot cancel FAX reception jobs.**] is displayed and the job cannot be canceled.

Send Job Status, Store Job Status or Scheduled Job Status

1 Select the job to be canceled, and [**Cancel**].

> **NOTE**
> A job can be canceled by selecting [**Menu**], selecting [**Cancel Job**] and then selecting the [**OK**] key.

2 Select [**Yes**].

Device/Communication

Configure the devices/lines installed or connected to this machine or check their status.

1 Display the screen.

1 Select the [**Status/Job Cancel**] key.

2 Select the items you want to check. Then, select the [**OK**] key to show the status of the selected device.

2 Check the status.

The items you can check are described below.

"Scanner"

Statuses such as the original scanning status and standby are displayed.

"Printer"

Statuses such as waiting and printing are displayed.

"FAX"

- The information such as sending/receiving and dialing is displayed.
- Select [**Line Off**] to cancel a fax in sending/receiving.

  FAX Operation Guide

USB Memory

- The usage, capacity and free space of the external media connected to this machine are displayed.
- Select [**Remove**] to safely remove the external media.

"USB Keyboard"

The status of the optional USB Keyboard is displayed.

"Network"

The network connection status appears.

Checking the Remaining Amount of Toner and Paper (Paper/Supplies)

Check the remaining amount of toner, and paper on the message display.

1 Display the screen.

Select the [**Status/Job Cancel**] key.

2 Check the status.

[▲] [▼] key > [**Toner Status**] or [**Paper Status**] > [**OK**] key

The items you can check are described below.

"Toner Status"

The amount of toner remaining is shown in levels.

"Paper Status"

The status of the source is displayed. Select the [►] key to view the next source. Select the [◄] key to return to the previous screen.

8 Setup and Registration (System Menu)

This chapter explains the following topics:

System Menu 8-2
Operation Method 8-2
System Menu Settings 8-3
Report 8-5
System/Network 8-7
User/Job Account 8-14
User Property 8-14
Common Settings 8-15
Copy 8-28
Printer 8-29
Send 8-31
FAX 8-32
Document Box 8-32
Edit Destination 8-33
Adjust/Maint. 8-34

System Menu

Configure settings related to overall machine operation.

Operation Method

Select the [**System Menu/Counter**] key to show the settings on the message display. Then, select from the settings displayed.

Operation Method (page 2-13)

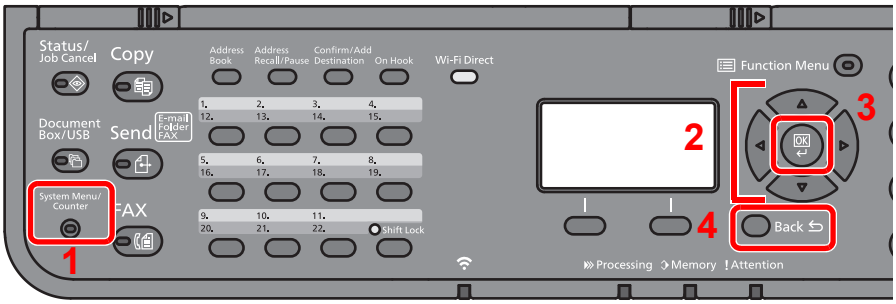

1 Displays the System Menu items.

2 Selects the item displayed or changes the numeric value.

3 Confirms the selected setting.

4 Cancels the current menu setting to return to the menu one level higher.

NOTE

- In order to change settings that require administer privileges, you must log in with administrator privileges. The factory default login user name and login password are set as shown below.

Model Name	Login User Name	Login Password
ECOSYS M2235dn/ECOSYS M2735dn	3500	3500

- If function default settings have been changed, the [**Reset**] key can be selected in each function screen to immediately change the settings.

Refer to System Menu Settings on the following page and configure as needed.

System Menu Settings

This section explains the functions that can be configured in System Menu. To configure the settings, select the item in System Menu and select the setting item. For details on each function, see the table below.

Item	Description	Reference Page
Report Print	Print reports to check the machine settings, status, and history. Settings for printing reports can also be configured.	page 8-5
Admin Rpt Set.		Refer to the **FAX Operation Guide**.
Result Rpt Set.		page 8-6
Job Log History		page 8-6
Counter	This counts the number of pages printed or scanned.	page 2-37
Network Setting	Configures network settings.	page 8-7
I/F Block Set.	This allows you to protect this machine by blocking the interface with external devices such as USB hosts.	page 8-12
Security Level	The Security Level setting is primarily a menu option used by service personnel for maintenance work. There is no need for customers to use this menu.	—
Restart	Restart the machine without turning the power switch off. Use this to deal with any unstable operation by the machine. (Same as the computer restart.)	page 8-13
Op Functions	You can use the optional applications installed on this machine.	page 8-13
User/Job Account	Configures settings related to machine management. User Login: ➡ Overview of User Login Administration (page 9-2) Job Accounting: ➡ Overview of Job Accounting (page 9-23)	—
User Property	Allows you to view information about logged in users and edit some of that information.	page 8-14
Language	Select the language displayed on the message display.	page 8-15
Default Screen	Select the screen appearing right after start-up (default screen).	page 8-15
Sound	Set options for buzzer sound during the machine operations.	page 8-15
Display Bright.	Set the brightness of the message display.	page 8-15
Orig./Paper Set.	Configure settings for originals.	page 8-16
Preset Limit	Restrict the number of copies that can be made at one time.	page 8-20
Measurement	Select inch or metric for the unit for paper dimensions.	page 8-20
Error Handling	Select whether to cancel or continue the job when error has occurred.	page 8-21
Date Setting	Configure settings related to the date and time.	page 8-21
Timer Setting	Configure settings related to the time.	page 8-22
Function Defaults	Defaults are the values automatically set after the warm-up is completed or the [**Reset**] key is selected. Set the defaults for available settings such as copying and sending. Setting the frequently-used values as defaults makes subsequent jobs easier.	page 8-24
Login Operation	Select the screen to enter the login user name and password when logging in.	page 8-24

Item	Description	Reference Page
RAM Disk Mode	A RAM disk can be created and its size can be set.	page 8-26
Format SD Card	Format an SD/SDHC memory card.	page 8-26
Optional Memory	When optional memory is installed, select the memory allocation scheme based on the application in which you are using the equipment.	page 8-26
FAX Server Settings	Configure settings for FAX Server.	page 8-14
Disp. Status/Log	Set the display method of the Status/Log.	page 8-27
USB KeyboardType	Select the type of USB keyboard that you want to use.	page 8-27
Low Toner Alert	Set the amount of remaining toner to notify the administrator when to order a toner when the toner is running low.	page 8-27
Show PowerOffMsg	Set the mode whether display a confirmation message in power supply off.	page 8-27
EnergySaver Set.	Select the method of recovery from energy saver.	page 8-28
Copy	Configures settings for copying functions.	page 8-28
Printer	Printing from computers, settings are generally made on the application software screen. However, the following settings are available for configuring the defaults to customize the machine.	page 8-29
Send	Configures settings for sending functions.	page 8-31
FAX	Configures settings for fax functions. ➨ **FAX Operation Guide**	—
Document Box	Configures settings related to the Job Box, Sub Address Box and Polling Box. For details on Sub Address Box and Polling Box, see the **FAX Operation Guide**.	page 8-32
Edit Destination	Configures Address Book and One Touch Key settings. Address Book: ➨ Adding a Destination (Address Book) (page 3-18) One Touch Key: ➨ Adding a Destination on One Touch Key (One Touch Key) (page 3-25)	page 8-33
Adjust/Maint.	Adjust printing quality and conduct machine maintenance.	page 8-34

Report

Print reports to check the machine settings, status, and history. Settings for printing reports can also be configured.

Report Print

[**System Menu/Counter**] key > [▲] [▼] key > [**Report**] > [**OK**] key > [▲] [▼] key > [**Report Print**] > [**OK**] key

Item	Description
Menu Map	Prints Menu Map to check the settings of the machine. 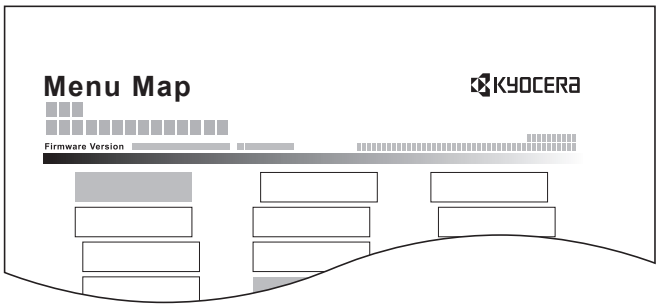
Status Page	Prints the status page, allowing you to check the information including current settings, memory capacity, and optional equipment installed. 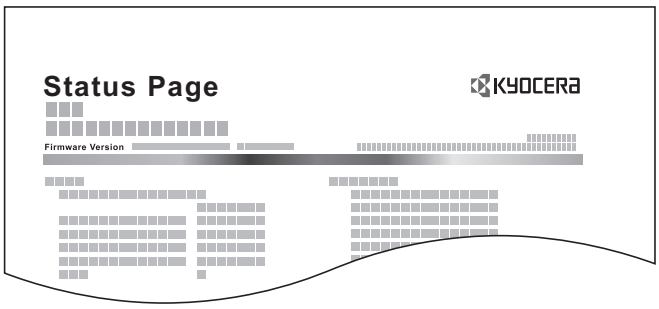
Font List	Prints the font list, allowing you to check the font samples installed in the machine. 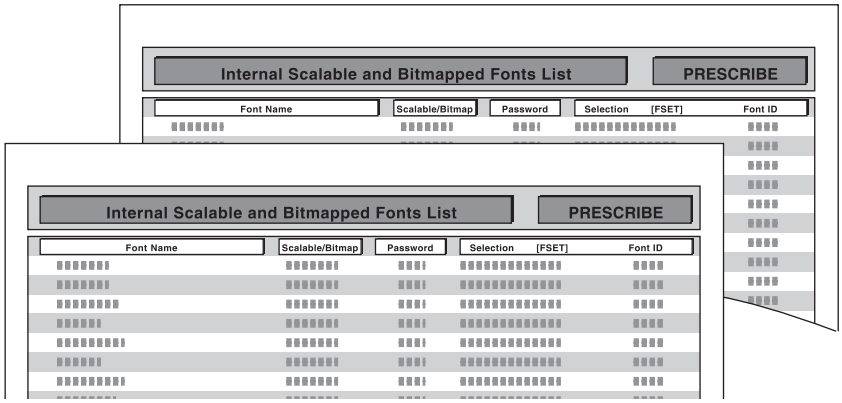

Admin Rpt Set.

[**System Menu/Counter**] key > [▲] [▼] key > [**Report**] > [**OK**] key > [▲] [▼] key > [**Admin Rpt Set.**] > [**OK**] key

Configure settings for Outgoing FAX report and Incoming FAX report.

FAX Operation Guide

Result Rpt Set.

[**System Menu/Counter**] key > [▲] [▼] key > [**Report**] > [**OK**] key > [▲] [▼] key > [**Result Rpt Set.**] > [**OK**] key

Item		Description
Send Result		Automatically print a report of transmission result when a transmission is complete.
	E-mail/Folder	Automatically print a report of transmission result when E-mail or SMB/FTP transmission is complete. **Value: Off, On, Error Only**
	FAX[*1]	**FAX Operation Guide**
	CancelBeforeSend[*2]	Print a send result report if the job is canceled before being sent. **Value: Off, On**
	Dest. Info.[*2]	Select the Recipient Format for the send result report. **Value: Dest. or Name, Dest. and Name**
FAX RX Result[*1]		**FAX Operation Guide**
JobFinish Notice		Attaches sent images to job finish notices. **Value: Do Not Attach Image, Attach SendImage**

*1 Only on products with the fax function installed.
*2 When "E-mail/Folder" and "FAX" are set to [**Off**], this function will not be displayed.

Job Log History

[**System Menu/Counter**] key > [▲] [▼] key > [**Report**] > [**OK**] key > [▲] [▼] key > [**Job Log History**] > [**OK**] key

Item	Description
Auto Sending	This function automatically sends the log history to the specified destinations whenever a set number of jobs has been logged. **Value: Off, On** **NOTE** If [**On**] is selected, specify the number of job histories. The setting range is 1 to 16.
Send History	You can also send the log history to the specified destinations manually.
Destination	Set the destination to which log histories are sent. Only E-mail address can be set.
Subject	Set the subject automatically entered when sending log histories by E-mail. **Value: Up to 60 characters**
Personal Info.	Select whether to include personal information in the job log. **Value: Include, Exclude**

System/Network

Configures machine system settings.

Network Setting

[**System Menu/Counter**] key > [▲] [▼] key > [**System/Network**] > [**OK**] key > [▲] [▼] key > [**Network Setting**] > [**OK**] key

Configures network settings.

Wired Netwk. Set

Item	Description
TCP/IP Settings	-
TCP/IP	Select whether to use TCP/IP Protocol. **Value: Off, On**
IPv4 Setting	Set up TCP/IP (IPv4) to connect to the network. This setting is available when [**TCP/IP**] is set to [**On**].
DHCP	Select whether to use the DHCP (IPv4) server. **Value: Off, On**
Auto-IP	Select whether to use Auto-IP. **Value: Off, On**
IP Address	Set the IP address. **Value: ###.###.###.###** **NOTE** When DHCP is set to [**On**], this item is displayed only and cannot be entered.
Subnet Mask	Set the IP subnet mask. **Value: ###.###.###.###** **NOTE** When DHCP is set to [**On**], this item is displayed only and cannot be entered.
Default Gateway	Set the IP gateway address. **Value: ###.###.###.###** **NOTE** When DHCP is set to [**On**], this item is displayed only and cannot be entered.

IMPORTANT

- **When setting the Auto-IP, enter "0.0.0.0" in [IP Address].**
- **After changing the setting, restart the network or turn the machine OFF and then ON.**

Item	Description
IPv6 Setting	Set up TCP/IP (IPv6) to connect to the network. This setting is available when [**TCP/IP**] is [**On**].
IPv6 Setting	Select whether to use IPv6. **Value: Off, On** **NOTE** Selecting [**On**] displays IP address in [**Link Local**] after restarting the network.
Manual Settings	Manually specify the IP address, prefix length, and gateway address of TCP/IP (IPv6). **Value** **IP Address:** **128-bits address is expressed in eight groups consisting of four-digit hexadecimal digits. The groups are separated by colon (:).** **Prefix Length:** **0 to 128** **Default Gateway:** **128-bits address is expressed in eight groups consisting of four-digit hexadecimal digits. The groups are separated by colon (:).** **NOTE** This function is displayed when [**IPv6 Setting**] is set to [**On**]. To enter "Default Gateway", set [**RA (Stateless)**] to [**Off**].
RA(Stateless)	Select whether to use RA (Stateless). **Value: Off, On** **NOTE** This function is displayed when [**IPv6 Setting**] is set to [**On**]. Selecting [**On**] displays IP address in [**IP Address 1 (to 5)**] after restarting the network.
DHCPv6 Settings	Select whether to use the DHCP (IPv6) server. **Value: Off, On** **NOTE** This function is displayed when [**IPv6 Setting**] is set to [**On**]. Selecting [**On**] displays IP address in [**IP Address**] after restarting the network.
LAN Interface	Specify the settings for the LAN interface to be used. **Value: Auto, 10BASE-Half, 10BASE-Full, 100BASE-Half, 100BASE-Full, 1000BASE-T**

IMPORTANT

After changing the setting, restart the network or turn the machine OFF and then ON.

Bonjour

Item	Description
Protocol Setting	Select whether to use Bonjour. **Value: Off, On**

IPSec

Item	Description
IPSec	Make this setting when you use IPSec. **Value: Off, On** **NOTE** If [**Bonjour**] is set to [**ON**], set [**Rule Setting**].

ProtocolSettings

Configure protocol settings.

Item	Description
NetBEUI	Selects whether to receive documents using NetBEUI.*1 **Value: Off, On**
SNMPv3	Select whether to communicate using SNMPv3.*1 **Value: Off, On**
FTP (Server)	Select whether to receive documents using FTP.*1 **Value: Off, On**
FTP (Client)	Select whether to send documents using FTP. When selecting [**On**], set the FTP Port Number. The default port number is 21. **Value: Off, On (Port Number: 1 to 65535)**

Item	Description
SMB	Select whether to send documents using SMB. When selecting [**On**], set the SMB default Port Number. The default port number is 445. **Value: Off, On (Port Number: 1 to 65535)**
SNMP	Select whether to communicate using SNMP.*1 **Value: Off, On**
SMTP	Select whether to send E-mail using SMTP. **Value: Off, On**
POP3	Select whether to receive E-mail using POP3. **Value: Off, On**
RAW Port	Select whether to receive documents using Raw Port.*1 **Value: Off, On**
LPD	Selects whether to receive documents using LPD.*1 **Value: Off, On**
IPP	Selects whether to receive documents using IPP. To use the IPP protocol, select [**Not Secure (IPP&IPPS)**] on IPP Security under Security Settings from the Command Center RX. The default port number is 631.*1 **Value: Off, On (Port Number: 1 to 32767)**
IPP Over SSL	Select whether or not to use IPP over SSL.*1, *2 **Value: Off, On (Port Number: 1 to 32767)** **NOTE** When selecting [**On**], it also requires a certificate for SSL. the default certificate is the self-certificate of the machine. **Command Center RX User Guide**
HTTP	Select whether to communicate using HTTP.*1 **Value: Off, On**
HTTPS	Select whether to communicate using HTTPS.*1, *2 **Value: Off, On**
LDAP	Select whether to use LDAP. **Value: Off, On**
ThinPrint	Select whether to use ThinPrint. To use the Thin Print protocol, set the protocol to [**On**]. The default port number is 4000.*1, *2 **Value: Off, On (Port Number: 1 to 32767)** **NOTE** This function is displayed only when the optional ThinPrint Option is activated.
Thin Print over SSL	To use the Thin Print over SSL protocol, set [**Thin Print Over SSL**] to [**On**].*1, *2 **Value: Off, On** **NOTE** • This function is displayed when [**ThinPrint**] is set to [**On**]. • When selecting [**On**], it also requires a certificate for SSL. The default certificate is the self-certificate of the machine. **Command Center RX User Guide**

Item	Description
WSD-SCAN	Select whether to use WSD Scan.*1 **Value: Off, On**
WSD-PRINT	Set whether to use our proprietary web services. WIA driver, TWAIN driver and Network FAX driver use this Enhanced WSD web service.*1 **Value: Off, On**
Enhanced WSD	Set whether to use our proprietary web services.*1 **Value: Off, On** **NOTE** Selecting [**Off**] will disable the functionality of WIA, TWAIN, and Network FAX driver.
EnhancedWSD(SSL)	Set whether to use our proprietary web services over SSL.*1, *2 **Value: Off, On** **NOTE** Selecting [**Off**] will disable the functionality of WIA, TWAIN and Network FAX drivers.
eSCL	Selects whether to receive scanned documents using eSCL.*1 **Value: Off, On**

Item	Description
eSCL over SSL	Selects whether to receive scanned documents using eSCL over SSL.*1, *2 **Value: Off, On**

*1 The setting will be changed after restarting the device or network.
*2 Set "SSL" to [**On**] in Secure Settings.
Secure Settings (page 8-12)

IMPORTANT
After changing the setting, restart the network or turn the machine OFF and then ON.

Secure Settings

Item	Description
SSL	Select whether or not to use SSL. **Value: Off, On**

Ping

Item	Description
Ping	Checks if communication with the destination by entering the host name or IP address of the destination is possible.

Restart Network

Item	Description
Restart Network	Restarts the network.

I/F Block Set.

[**System Menu/Counter**] key > [▲] [▼] key > [**System/Network**] > [**OK**] key > [▲] [▼] key > [**I/F Block Set.**] > [**OK**] key

This allows you to protect this machine by blocking the interface with external devices such as USB hosts.

Item	Description
USB Host	This locks and protects the USB host. **Value: Unblock, Block**
USB Device	This locks and protects the USB interface connector (USB Device). **Value: Unblock, Block**
USB Storage	This locks and protects the USB memory slot. **Value: Unblock, Block** **NOTE** This function is available when USB Host is set to [**Unblock**].

IMPORTANT
After changing the setting, restart the network or turn the machine OFF and then ON.

Security Level

[**System Menu/Counter**] key > [▲] [▼] key > [**System/Network**] > [**OK**] key > [▲] [▼] key > [**Security Level**] > [**OK**] key

Item	Description
Security Level	Specify the security level. **Value** **Low: This mode is used during maintenance. Do not use normally.** **High: This is the security setting we recommend. Use this setting normally.** **Very High: In addition to [High] setting, this setting disables the machine settings to be changed from external command.**

Restart

[**System Menu/Counter**] key > [▲] [▼] key > [**System/Network**] > [**OK**] key > [▲] [▼] key > [**Restart**] > [**OK**] key

Item	Description
Restart	Restart the machine without turning the power switch off. Use this to deal with any unstable operation by the machine. (Same as the computer restart.)

Op Functions

[**System Menu/Counter**] key > [▲] [▼] key > [**System/Network**] > [**OK**] key > [▲] [▼] key > [**Op Functions**] > [**OK**] key

Item	Description
Op Functions	You can use the optional applications installed on this machine. Optional Applications (page 11-6)

FAX Server Settings

[**System Menu/Counter**] key > [▲] [▼] key > [**System/Network**] > [**OK**] key > [▲] [▼] key > [**FAX Server Set.**] > [**OK**] key

Configure settings for FAX Server.

Item	Description
FAX Server	Select whether or not to use FAX Server. **Value: Off, On**
Address Settings	Set the prefix, suffix, and domain name to be assigned to the address. **NOTE** For the fax server information, ask your fax server administrator.
File Format	Select the default type of the files to be sent. **Value: PDF, TIFF, XPS**
AddrBookDefaults	Set the expansion address book to be used. **Value: Machine AddrBook, Ext. Address Book** **NOTE** • This appears when [**On**] is set in fax server. • This does not appear when extension address book is not enabled. **Command Center RX User Guide**

User/Job Account

[**System Menu/Counter**] key > [▲] [▼] key > [**User/Job Account**] > [**OK**] key

Configure settings related to machine management.

Overview of User Login Administration (page 9-2)
Overview of Job Accounting (page 9-23)
Unknown ID Job (page 9-39)

User Property

[**System Menu/Counter**] key > [▲] [▼] key > [**User Property**] > [**OK**] key

Allows you to view information about logged in users and edit some of that information.

Enabling User Login Administration (page 9-3)

Common Settings

Configures overall machine operation.

Language

[**System Menu/Counter**] key > [▲] [▼] key > [**Common Settings**] > [**OK**] key > [▲] [▼] key > [**Language**] > [**OK**] key

Item	Description
Language	Select the language displayed on the message display.

Default Screen

[**System Menu/Counter**] key > [▲] [▼] key > [**Common Settings**] > [**OK**] key > [▲] [▼] key > [**Default Screen**] > [**OK**] key

Item	Description
Default Screen	Select the screen appearing right after start-up (default screen). **Value: Status, Copy, Send, FAX, Document Box**

Sound

[**System Menu/Counter**] key > [▲] [▼] key > [**Common Settings**] > [**OK**] key > [▲] [▼] key > [**Sound**] > [**OK**] key

Item		Description
Buzzer		Set options for buzzer sound during the machine operations.
	Key Confirmation	Emit a sound when the operation panel keys are selected. **Value: Off, On**
	Job Finish	Emit a sound when a print job is normally completed. **Value: Off, On, FAX RX Only**[*1]
	Ready	Emit a sound when the warm-up is completed. **Value: Off, On**
	Warning	Emit a sound when errors occur. **Value: Off, On**
	Keyboard Confirm	Emit a sound to confirm keypresses with a sound. **Value: Off, On**
FAX Speaker[*1]		**FAX Operation Guide**
FAX Monitor[*1]		**FAX Operation Guide**

*1 Only on products with the fax function installed.

Display Bright. (Display Brightness)

[**System Menu/Counter**] key > [▲] [▼] key > [**Common Settings**] > [**OK**] key > [▲] [▼] key > [**Display Bright.**] > [**OK**] key

Item	Description
Display Bright.	Set the brightness of the message display. **Value: Darker -3, Darker -2, Darker -1, Normal 0, Lighter +1, Lighter +2, Lighter +3**

Orig./Paper Set.

[**System Menu/Counter**] key > [▲] [▼] key > [**Common Settings**] > [**OK**] key > [▲] [▼] key > [**Orig./Paper Set.**] > [**OK**] key

Configure settings for originals.

Item		Description
Custom Orig. Size		Set up frequently-used custom original size. The custom size option is displayed on the screen to select original size. **Value** **Metric** **X: 50 to 356 mm (in 1 mm increments)** **Y: 50 to 216 mm (in 1 mm increments)** **Inch** **X: 1.97 to 14.02" (in 0.01" increments)** **Y: 1.97 to 8.50" (in 0.01" increments)** **X=Length, Y=Width** Horizontal 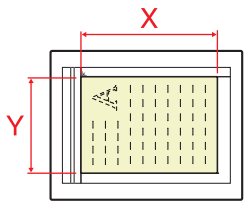
Detect Orig.(DP)		Select whether to automatically detect originals of the document processor.
	Auto Detect	Select whether to enable automatic detection of original size. **Value: off, on**
	System of Units	Select metric or inch for the unit of original size detection. **Value: Metric, Inch**
	LGL/OFII/216x340	As Legal, OficioII and 216 x 340 mm are similar in size, select either one of them for automatic detection. **Value: Legal, OficioII, 216 x 340 mm** **NOTE** When [**Auto Detect**] is set to [**Off**], this function will not be displayed. When [**System of Units**] is set to [**Metric**], this function will not be displayed.
Def. Orig. Size		Set the default original size. **Value: Off*1, A4, A5, A6, B5, B6, Letter, Statement, Executive, 16K**

*1 This function is displayed when [**Auto Detect**] in [**Detect Orig.(DP)**] is set to [**On**].

Item	Description
Custom PaperSize	Set up frequently-used custom paper size. One custom paper size is set for each paper supply source. The custom size option is displayed on the screen to select paper size.
Cassette 1 (to3) Size	Register the custom paper size to be used in Cassette 1 (to 3). **Value** **Metric** **X: 105 to 216 mm (in 1 mm increments)** **Y: 148 to 356 mm (in 1 mm increments)** **Inch** **X: 4.13 to 8.50" (in 0.01" increments)** **Y: 5.83 to 14.02" (in 0.01" increments)** **X=Length, Y=Width** Vertical 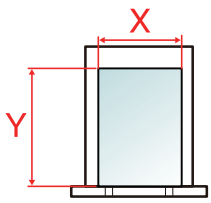
MP Tray Size	Register the custom paper size to be used in the multipurpose tray. **Value** **Metric** **X: 70 to 216 mm (in 1 mm increments)** **Y: 148 to 356 mm (in 1 mm increments)** **Inch** **X: 2.76 to 8.50" (in 0.01" increments)** **Y: 5.83 to 14.02" (in 0.01" increments)** **X=Length, Y=Width** Vertical Horizontal 
Cassette 1 (to 3) Set.	Select the paper size and media type for cassettes 1 (to 3). Cassette 1 (to 3) Set. (Cassette 1 (to 3) Settings) (page 8-19)
MP Tray Set.	Select the paper size and media type for the multipurpose tray. MP Tray Set. (Multipurpose Tray Settings) (page 8-19)
Media Type Set.	Select weight for each media type. For Custom 1 to 8, settings for duplex printing and media type name can be changed. Media Type Setting (page 8-20)
Media for Auto	Select a default media type for auto paper selection when [**Auto**] is selected of Paper Selection. If [**Plain**] is selected, the paper source with plain paper loaded in the specific size is selected. Select [**All Media Types**] for the paper source with any kind of paper loaded in the specific size. **Value: All Media Types, Plain, Transparency, Rough, Vellum, Labels, Recycled, Preprinted, Bond, Cardstock, Color, Prepunched, Letterhead, Envelope, Thick, High Quality, Custom 1 to 8**

Item	Description
Def. PaperSource	Select the default paper source from Cassette 1 to 3 and multipurpose tray. **Value: Cassette 1 (to 3), MP Tray** **NOTE** [**Cassette 2**] to [**Cassette 3**] are displayed when optional paper feeder is installed.
SpecialPaper Act.	When printing on Prepunched, Preprint, and Letterhead, punch-holes might not be aligned or the print direction might be upside-down depending on how originals are set and the combination of copying functions. In such a case, select [**Adj. PrintDirect**] to adjust the print direction. When paper orientation is not important, select [**Speed Priority**]. If [**Adj. PrintDirect**] is selected, load paper according to the steps below. Example: copying on Letterhead 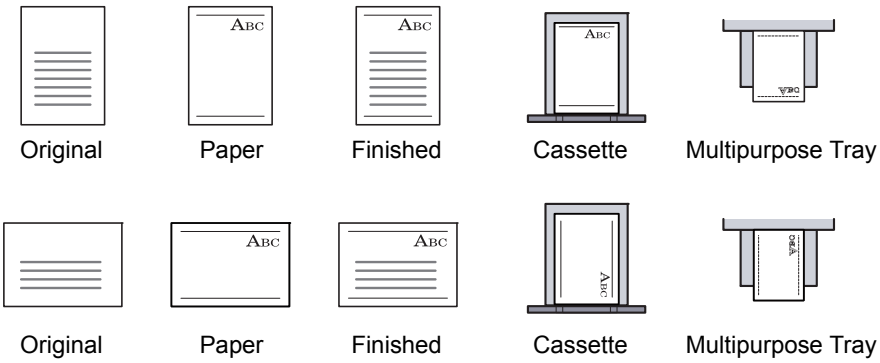 **Value: Adj. PrintDirect, Speed Priority**
Paper Setup Msg **Cassette 1 to 3** **MP Tray**	Set whether to display the confirmation screen for the paper setting when a new paper is set for each cassette. **Value: Off, On** **NOTE** [**Cassette 2**] to [**Cassette 3**] are displayed when optional paper feeder is installed.

Cassette 1 (to 3) Set. (Cassette 1 (to 3) Settings)

[**System Menu/Counter**] key > [▲] [▼] key > [**Common Settings**] > [**OK**] key > [▲] [▼] key > [**Orig./Paper Set.**] > [**OK**] key > [▲] [▼] key > [**Cassette 1 (to 3) Set.**] > [**OK**] key

Select paper size and media type for Cassettes 1 (to 3).

Item	Description
Cassette 1 (to 3) Size	Available options are as follows: **Value**: **A4, A5-R, A5, A6, B5, Folio, 216 × 340 mm, Letter, Legal, Statement, Executive, Oficio II, 16K, ISO B5, Custom**
Cassette 1 (to 3) Type[*1]	Select the media type. **Value: Plain (60 to 105 g/m^2), Rough, Vellum (60 to 163 g/m^2), Recycled, Preprinted**[*2]**, Bond, Color, Prepunched**[*2]**, Letterhead**[*2]**, Thick (106 to 163 g/m^2), High Quality, Custom 1 to 8**

*1 To change to a media type other than "Plain".
Media Type Setting (page 8-20).
When a paper weight that cannot be loaded in the cassette is set for a media type, that media type does not appear.

*2 To print on preprinted or prepunched paper or on letterhead.
SpecialPaper Act. (page 8-18)

MP Tray Set. (Multipurpose Tray Settings)

[**System Menu/Counter**] key > [▲] [▼] key > [**Common Settings**] > [**OK**] key > [▲] [▼] key > [**Orig./Paper Set.**] > [**OK**] key > [▲] [▼] key > [**MP Tray Set.**] > [**OK**] key

Select paper size and media type for the multipurpose tray.

Item	Description
MP Tray Size	Available options are as follows: **Value: A4, A5-R, A5, A6, B5, B6, Folio, 216 × 340 mm, Letter, Legal, Statement, Executive, Oficio II, 16K, ISO B5, Envelope #10, Envelope #9, Envelope #6, Envelope Monarch, Envelope DL, Envelope C5, Hagaki (Cardstock), Oufuku Hagaki (Return postcard), Youkei 4, Youkei 2, Custom**[*1]
MP Tray Type[*2]	Select the media type. **Values: Plain (60 to 105 g/m^2), Transparency, Rough, Vellum (60 to 220 g/m^2), Labels, Recycled, Preprinted**[*3]**, Bond, Cardstock, Color, Prepunched**[*3]**, Letterhead**[*3]**, Envelope, Thick (106 to 220 g/m^2), High Quality, Custom 1 to 8**

*1 For instructions on how to specify the custom paper size.
Custom PaperSize (page 8-17)
*2 To change to a media type other than "Plain".
Media Type Setting (page 8-20)
*3 To print on preprinted or prepunched paper or on letterhead.
SpecialPaper Act. (page 8-18)

Media Type Setting

The following media type and paper weight combinations are available.

Paper Weight	Weight (g/m²)	Paper Weight	Weight (g/m²)
Light	Up to 59 g/m²	**Heavy 1**[*1]	106 g/m² to 135 g/m²
Normal 1	60 g/m² to 74 g/m²	**Heavy 2**[*1]	136 g/m² to 163 g/m²
Normal 2	75 g/m² to 90 g/m²	**Heavy 3**[*1]	164 g/m² to 220 g/m²
Normal 3	91 g/m² to 105 g/m²	**Extra Heavy**[*1]	Transparencies

*1 The processing speed will be slower than normal.

Each media type's default weight is indicated.

Media Type	Default	Media Type	Default
Plain	Normal 2	**Color**	Normal 2
Rough	Normal 3	**Prepunched**	Normal 2
Vellum	Heavy 1	**Letterhead**	Normal 3
Labels	Heavy 2	**Envelope**	Heavy 3
Recycled	Normal 2	**Thick**	Heavy 2
Preprinted	Normal 2	**High Quality**	Normal 2
Bond	Normal 3	**Custom 1 to 8**	Normal 2
Cardstock	Heavy 3		

For Custom 1 to 8, settings for duplex printing and media type name can be changed.

Item		Description
Duplex Print	**Permit**	Duplex printing allowed.
	Prohibit	Duplex printing not allowed.
Name		Change names for Custom 1 to 8. Names should be not more than 16 characters. Selecting media type at multipurpose tray, the name after change will be displayed. Character Entry Method (page 11-8)

Preset Limit

[**System Menu/Counter**] key > [▲] [▼] key > [**Common Settings**] > [**OK**] key > [▲] [▼] key > [**Preset Limit**] > [**OK**] key

Item	Description
Preset Limit	Restrict the number of copies that can be made at one time. **Value: 1 to 999 copies.**

Measurement

[**System Menu/Counter**] key > [▲] [▼] key > [**Common Settings**] > [**OK**] key > [▲] [▼] key > [**Measurement**] > [**OK**] key

Item	Description
Measurement	Select inch or metric for the unit for paper dimensions. **Value: inch, mm**

Error Handling

[**System Menu/Counter**] key > [▲] [▼] key > [**Common Settings**] > [**OK**] key > [▲] [▼] key > [**Error Handling**] > [**OK**] key

Select whether to cancel or continue the job when error has occurred.

Item	Description
DuplexPaperError	Select what to do when duplex printing is not possible for the selected paper size and media type. **Value** **1-sided: Printed in 1-sided** **Display Error: Message to cancel printing is displayed.**
PaperMismatchErr	Select what to do when the selected paper size or type does not match paper size or type loaded in the specified paper source while printing from the computer by specifying the cassette or multipurpose tray. **Value** **Ignore: The setting is ignored and the job is printed.** **Display Error: Message to cancel printing is displayed.**

Date Setting

[**System Menu/Counter**] key > [▲] [▼] key > [**Common Settings**] > [**OK**] key > [▲] [▼] key > [**Date Setting**] > [**OK**] key

Configure settings related to the date and time.

Item	Description
Date/Time	Set the date and time for the location where you use the machine. When you send an E-mail using the transmission function, the date and time as set here will be printed in the header of the E-mail message. **Value: Year (2000 to 2037), Month (01 to 12), Day (01 to 31), Hour (00 to 23), Minute (00 to 59), Second (00 to 59)** Setting Date and Time (page 2-17) **NOTE** If you change the date/time while using the trial version of an application, you will no longer be able to use the application.
Date Format	Select the display format of year, month, and date. The year is displayed in Western notation. **Value: Month/Day/Year, Day/Month/Year, Year/Month/Day**
Time Zone	Set the time difference from GMT. Choose the nearest listed location from the list. If you select a region that utilizes summer time, configure settings for summer time. Setting Date and Time (page 2-17)
Summer Time	

Timer Setting

[**System Menu/Counter**] key > [▲] [▼] key > [**Common Settings**] > [**OK**] key > [▲] [▼] key > [**Timer Setting**] > [**OK**] key

Configure settings related to the time.

Item	Description
Auto Panel Reset	If no jobs are run for a certain period of time, automatically reset settings and return to the default setting. Select to use Auto Panel Reset or not. **Value: Off, On** **NOTE** The time allowed to elapse before the panel is reset is set with the following: PanelReset Timer (page 8-22)
PanelReset Timer	If you select [**On**] for Auto Panel Reset, set the amount of time to wait before Auto Panel Reset. **Value: 5 to 495 seconds (in 5 second increments)** **NOTE** This function is displayed when [**Auto Panel Reset**] is set to [**On**].
Sleep Level (models except for Europe)	Select the Sleep level. Set the Energy Saver mode to reduce power consumption even more than Quick Recovery mode. **Value: Quick Recovery, Energy Saver**
(Detailed settings)	Set whether to use the Energy Saver mode for the following functions individually: • Network • Card Reader*1 • FAX*2 **Value: Off, On** **NOTE** When the machine enters Energy Saver, the ID card cannot be recognized.
Sleep Rules (models for Europe)	Select whether to use the Sleep mode for the following functions individually: • Network • Card Reader*1 • FAX*2 **Value: Off, On** **NOTE** When the machine enters Energy Saver, the ID card cannot be recognized.
Sleep Timer	Set amount of time before entering Sleep. **Value** **For Europe** **1 to 120 minutes (1 minute increments)** **Except for Europe** **1 to 240 minutes (1 minute increments)** Sleep (page 2-20)

Item	Description
Power Off Rule (models for Europe)	Select whether or not the machine enters Power Off mode for the following function. Select [**On**] to set the Power Off mode. • Network • FAX*2 • USB Cable • USB Host • RAM Disk • Remote Diag. **Value: Off, On** **NOTE** Even when any of the functions is set to [**On**], if [**FAX**] is set to [**Off**], the machine does not enter Power Off Mode. Even when [**Network**] or [**USB Cable**] is set to [**Off**], if the machine does not communicate with the other devices, the machine will enter Power Off Mode.
Power Off Timer (models for Europe)	Select whether to turn off the power automatically after a period of inactivity. **Value: 1 hour, 2 hours, 3 hours, 4 hours, 5 hours, 6 hours, 9 hours, 12 hours, 1 day, 2 days, 3 days, 4 days, 5 days, 6 days, 1 week**
Auto Err. Clear	If an error occurs during processing, processing stops to wait for the next step to be taken by the user. In the Auto Error Clear mode, automatically clear the error after a set amount of time elapses. **Value: Off, On**
Err. Clear Timer	If you select [**On**] for Auto Error Clear, set the amount of time to wait before automatically clearing errors. **Value: 5 to 495 seconds (in 5 second increments)** **NOTE** This function is displayed when [**Auto Err. Clear**] is set to [**On**].
Unusable Time*2	Set a time period during which the machine will not print received faxes. **FAX Operation Guide**
Ping Timeout	Set the time until timeout occurs when [**Ping**] is executed in "System/Network". **Value: 1 to 30 seconds (in 1 second increments)**

*1 Displayed only when the optional Card Authentication Kit is activated.
*2 Displayed only when the optional FAX Kit is installed.

Function Defaults

[**System Menu/Counter**] key > [▲] [▼] key > [**Common Settings**] > [**OK**] key > [▲] [▼] key > [**Function Defaults**] > [**OK**] key

Item	Description
Color Selection	Select the default color mode for scanning documents. **Value: Auto(Color/B&W), Auto(Color/Gray), Full Color, Grayscale, Black & White**
Scan Resolution	Select the default scanning resolution. **Value: 200×100dpi Norm., 200×200dpi Fine, 200×400dpi S.Fin, 300×300dpi, 400×400dpi U.Fin, 600×600dpi**
FAX Resolution	**FAX Operation Guide**
Orig.Image(Copy)	Set the default original document type for copying. **Value: Text+Photo, Photo, Text, Graphic/Map**
Orig.Image(Send)	Set the default original document type for sending. **Value: Text+Photo, Photo, Text, for OCR, Light Text/Line** **NOTE** [for OCR] is only available when "Color Selection" is set to [Black & White].
Zoom	Select the enlarged/reduced default when paper size/sending size changed after the originals set. **Value: 100%, Auto**
Collate	Set the defaults for Collate. **Value: Off, On**
Original Orientation	Set the original orientation defaults. **Value: Top Edge on Top, Top Edge on Left**
Backgrnd(Copy)	Set the default Backgrnd Density (Copy). **Value: Off, Auto, Manual (Darker 5)**
Backgrnd(Send)	Set the default Backgrnd Density (Send). **Value: Off, Auto, Manual (Darker 5)**
EcoPrint	Select the EcoPrint default. **Value: Off, On**
Skip Blank(Copy)	Set the default Skip Blank(Copy) settings. **Value: Off, On**
Skip Blank(Send)	Set the default Skip Blank(Send) settings. **Value: Off, On**
File Name Entry	Set an automatically entered name (default) for jobs. Additional information such as Date and Job No. can also be set. **Value** **File Name: Up to 32 characters can be entered.** **Additional Info: None, Date, Job No., Job No. + Date, Date + Job No.**
Subject/Body	Set the subject and body automatically entered (default subject and body) when sending the scanned originals by E-mail. **Value** **Subject: Up to 60 characters can be entered.** **Body: Up to 500 characters can be entered.**
Con.scan-Copy	Set the continuous scan (copy) defaults. **Value: Off, On**

Item		Description
Con.scan-FAX		**FAX Operation Guide**
Con.scan-Others		Set the continuous scan (excludes copy) defaults. **Value: Off, On**
File Format		Select the default type of the files to be sent. **Value: PDF, TIFF, XPS, JPEG, OpenXPS, High Comp. PDF**
File Separation		Select the default file separation setting. **Value: Off, Each Page**
JPEG/TIFF Print		Select the image size (resolution) when printing JPEG or TIFF file. **Value: Paper Size, Image Resolution, Print Resolution**
XPS FitTo Page		Set the default value for the XPS fit to page function. **Value: Off, On**
Detail Settings		—
	2 in 1 Layout	Set the default for the 2-in-1 layout of Combine copies. **Value: L to R, T to B, R to L, B to T**
	4 in 1 Layout	Set the default for the 4-in-1 layout of Combine copies. **Value: Right then Down, Down then Right, Left then Down, Down then Left**
	Border Line	Set the default for the border line of Combine copies. **Value: None, Solid Line, Dotted Line, Positioning Mark**
	Finish. Binding	Set the default for the binding orientation of finished two-sided copies. **Value: Left/Right, Top**
	Image Quality	Select the default PDF/TIFF/JPEG/XPS/OpenXPS file quality. **Value: 1 Low(High Comp) to 5 High(Low Comp)**
	Color TIFF Comp.	Select the compression method for sending the color documents in the TIFF format. **Value: TIFF V6, TTN2**
	PDF/A	Select the default PDF/A setting. **Value: Off, PDF/A-1a, PDF/A-1b**
	High Comp. PDF	Select the default quality setting for high compressed PDF files. **Value: Comp. Priority, Standard, Quality Priority**
	Blank Lvl (Copy)	Select the default Blank Detection Level (Copy) settings. **Value: Low, Middle, High**
	Blank Lvl (Send)	Select the default Blank Detection Level (Send/Store) settings. **Value: Low, Middle, High**

Login Operation

[**System Menu/Counter**] key > [▲] [▼] key > [**Common Settings**] > [**OK**] key > [▲] [▼] key > [**Login Operation**] > [**OK**] key

Item	Description
Login Operation	Select the screen to enter the login user name and password when logging in. **Value: Use Numeric Key, Select Character**

RAM Disk Mode

[**System Menu/Counter**] key > [▲] [▼] key > [**Common Settings**] > [**OK**] key > [▲] [▼] key > [**RAM Disk Mode**] > [**OK**] key

Item	Description
RAM Disk Mode	A RAM disk can be created and its size can be set. Creating a RAM disk makes it possible to print from a Job Box. **Value** **RAM Disk Mode: Off, On** **RAM Disk Size: The setting range varies depending on the amount of memory installed and the option memory usage setting.**

IMPORTANT

After changing the setting, restart the network or turn the machine OFF and then ON.

Format SD Card

[**System Menu/Counter**] key > [▲] [▼] key > [**Common Settings**] > [**OK**] key > [▲] [▼] key > [**Format SD Card**] > [**OK**] key

Format an SD/SDHC memory card.

A new SD card must be formatted before it can be used in the machine.

IMPORTANT

Formatting will destroy any existing data on a storage device including a used SD card.

Optional Memory

[**System Menu/Counter**] key > [▲] [▼] key > [**Common Settings**] > [**OK**] key > [▲] [▼] key > [**Optional Memory**] > [**OK**] key

Item	Description
Optional Memory	When optional memory is installed, select the memory allocation scheme based on the application in which you are using the equipment. **Value: Normal, Printer Priority, Copy Priority**

IMPORTANT

After changing the setting, restart the network or turn the machine OFF and then ON.

Disp. Status/Log

[**System Menu/Counter**] key > [▲] [▼] key > [**Common Settings**] > [**OK**] key > [▲] [▼] key > [**Disp. Status/Log**] > [**OK**] key

Set the display method of the Status/Log.

Item	Description
JobsDetailStatus	**Value: Show All, My Jobs Only, Hide All**
Jobs Log	**Value: Show All, My Jobs Only, Hide All**
FAX Log[*1]	**Value: Show All, Hide All**

*1 Displayed only when the optional FAX Kit is installed.

USB KeyboardType

[**System Menu/Counter**] key > [▲] [▼] key > [**Common Settings**] > [**OK**] key > [▲] [▼] key > [**USB KeyboardType**] > [**OK**] key

Item	Description
USB KeyboardType	Select the type of USB keyboard that you want to use. **Value: US, Europe US, France, Germany**

Low Toner Alert

[**System Menu/Counter**] key > [▲] [▼] key > [**Common Settings**] > [**OK**] key > [▲] [▼] key > [**Low Toner Alert**] > [**OK**] key

Item	Description
Low Toner Alert	Set the amount of remaining toner to notify the administrator when to order a toner when the toner is running low. **Value: Off, On** **NOTE** Selecting [**Off**] alerts you low toner when the amount of remaining toner becomes 5%. If [**On**] is selected, set the amount of remaining toner to alert. The setting range is 5 to 100% (in 1% increments).

Show PowerOffMsg

[**System Menu/Counter**] key > [▲] [▼] key > [**Common Settings**] > [**OK**] key > [▲] [▼] key > [**Show PowerOffMsg**] > [**OK**] key

Item	Description
Show PowerOffMsg	Set the mode whether display a confirmation message in power supply off. **Value: Off, On**

EnergySaver Set.

[**System Menu/Counter**] key > [▲] [▼] key > [**Common Settings**] > [**OK**] key > [▲] [▼] key > [**EnergySaver Set.**] > [**OK**] key

Item	Description
Recovery Level	Select the method of recovery from energy saver. **Value:** **Full Recovery:** **This mode enables the use of all functions immediately. However, this mode saves less energy.** **Normal Recovery:** **In this mode, you can select the method from the following: enabling the use of all functions immediately or enabling the use of desired functions only. If you want to use all functions immediately, press the power switch to execute recovery.** **Power Saving Recovery:** **This mode enables the use of desired functions only. This mode saves energy most effectively.**

Copy

[**System Menu/Counter**] key > [▲] [▼] key > [**Copy**] > [**OK**] key

Configures settings for copying functions.

Item	Description
Paper Selection	Set the default paper selection. **Value: Auto, Def. PaperSource**
AutoPaperSelect.	If [**Auto**] is selected for Paper Selection, set the paper size selection method when the zoom changes. **Value** **MostSuitableSize: Select paper based on the current zoom and the size of the original.** **Same as OrigSize: Select paper that matches the size of the original, regardless the zoom.**
Auto % Priority	When a paper source of different size from the original is selected, select whether automatic zoom (reduce/zoom) is performed. **Value: Off, On**
DP Read Action	When the document processor is used, select the scanning operation for the document processor. **Value** **Speed Priority: Gives priority to scanning speed.** **Quality Priority: Gives priority to image quality at a slightly slower scan speed.**
Select Key Set.	Commonly used copying functions can be registered to the Select key. Functions can be easily configured by selecting the Select key. **Value: None, Paper Selection, Collate, Duplex, Zoom, Combine, Original Size, Orig. Orientation, Mixed Size Orig., Original Image, Density, EcoPrint, Continuous Scan, File Name Entry, JobFinish Notice, Print Override, Sharpness, Contrast, Backgrnd Density, Skip Blank Page**

Printer

[**System Menu/Counter**] key > [▲] [▼] key > [**Printer**] > [**OK**] key

Printing from computers, settings are generally made on the application software screen. However, the following settings are available for configuring the defaults to customize the machine.

Item	Description
Emulation Set.	Select the emulation for operating this machine by commands oriented to other types of printers. **Value: Line Printer, IBM Proprinter, EPSON LQ-850, PCL6, KPDL, KPDL (Auto)** **NOTE** When you have selected [**KPDL**] or [**KPDL (Auto)**], set "KPDL Error Rpt", too.
Alt. Emulation	When you have selected [**KPDL (Auto)**] as emulation mode, you can switch between KPDL and another emulation mode (alternative emulation) automatically according to the data to print. **Value: Line Printer, IBM Proprinter, EPSON LQ-850, PCL6**
KPDL Error Rpt	When an error has occurred during printing in KPDL emulation mode, set whether or not the error report is output. **Value: Off, On**
EcoPrint	EcoPrint conserves toner when printing. This is recommended for test copies where faded printing is not a problem. **Value: Off, On**
Override A4/LTR	Select whether to treat A4 size and Letter, which are similar in size, as the same size when printing. **Value** **Off: A4 and Letter are not regarded as the same in size.** **On: A4 and Letter are regarded as the same in size. The machine will use whichever size is in the paper source.**
Duplex	Select binding orientation for duplex mode. **Value: Off, Bind Long Edge, Bind Short Edge**
Copies	Set the default number of copies, from 1 to 999. **Value: 1 to 999 copies**
Orientation	Set the default orientation, [**Portrait**] or [**Landscape**]. **Value: Portrait, Landscape**
Wide A4	Turn this to on to increase the maximum number of characters that can be printed in a line for an A4 page (78 characters at 10 pitch) and Letter size page (80 characters at 10 pitch). This setting is only effective in PCL6 emulation. **Value: Off, On**
FormFeed TimeOut	Receiving print data from the computer, the machine may sometimes wait if there is no information signaling that the last page does not have any more data to be printed. When the preset timeout passes, the machine automatically prints paper. The options are between 5 and 495 seconds. **Value: 5 to 495 seconds (in 5 second increments)**
LF Action	Set the line feed action when the machine receives the line feed code (character code 0AH). **Value: LF Only, LF and CR, Ignore LF**
CR Action	Set the character return action when the machine receives the character return code (character code 0DH). **Value: CR Only, LF and CR, Ignore CR**

Item	Description
Job Name	Set whether the job name set in the printer driver is displayed. **Value: Off, On** **NOTE** When selecting [**On**], select the job name to be displayed from [**Job Name**], [**Job No.+Job Name**], or [**Job Name+Job No.**].
User Name	Set whether the user name set in the printer driver is displayed. **Value: Off, On**
MP Tray Priority	If paper is set in the multipurpose tray then it is possible for priority to be given to that multipurpose tray in the paper feed. **Value** **Off: The printer driver settings are followed.** **Auto Feed: If Auto is selected in the printer driver and there is paper in the multipurpose tray then the paper feed will be from the multipurpose tray.** **Always: If there is paper in the multipurpose tray then the paper feed will be from the multipurpose tray regardless of what is set in the printer driver.**
Paper Feed Mode	While printing from the computer, select how to feed paper when the paper source and type are specified. **Value** **Auto: Search the paper source that matches the selected paper size and type.** **Fixed: Print on paper loaded in the specified paper source.**
Auto Cass.Change	Select the following actions when the paper runs out in the paper source while printing. **Value: Off, On** **NOTE** When selecting [**Off**], the machine displays "Load paper in cassette #." (# is a cassette number) or "Load paper in MP Tray", and stops printing. Load the paper according to the paper source displayed to resume printing. To print from the other paper source, select [**Paper**]. Select the desired paper source, and then select the [**OK**] key. When selecting [**On**], the machine continues printing automatically when the other cassette contains the same paper as the currently-used cassette.
Resolution	Set the resolution used for printing. **Value: 300dpi, 600dpi, Fast1200, Fine1200** **NOTE** Settings that are received from the printer driver have priority over the operation panel settings.
KIR	The machine is equipped with the smoothing function, which realizes an excellent printing of about 9600 dpi (600 dpi × 15 gradation) × 600 dpi. **Value: Off, On**

Send

[**System Menu/Counter**] key > [▲] [▼] key > [**Send**] > [**OK**] key

Configures settings for sending functions.

Item		Description
Select Key Set.		Commonly used sending functions can be registered to the Select key. Functions can be easily configured by selecting the Select key. **Value: None, Color Selection, Original Size, Original Image, Scan Resolution, Sending Size, Zoom, Orig. Orientation, Mixed Size Orig., Continuous Scan, File Format, File Name Entry, Subject/Body, JobFinish Notice, FAX Resolution*1, FAX Direct TX*1, FAX Delayed TX*1, FAX RX Polling*1, FAX TX Report*1, Density, FTP Encrypted TX, File Separation, Sharpness, Contrast, Backgrnd Density, Skip Blank Page**
DestinationCheck		Set the confirmation of destinations. *2
	Check beforeSend	Select whether to display the confirmation screen of destinations after pressing the [**Start**] key when performing sending jobs. **Value: Off, On**
	Check New Dest.	When adding new destination, select whether to display the entry check screen to check the entered destination. **Value: Off, On**
New Dest. Entry		Select whether to permit direct entry of destination.*3 **Value: Permit, Prohibit**
Recall Dest.		Select whether to permit usage of [**Recall**] on the Send screen.*3 **Value: Permit, Prohibit**
Default Screen		Use this procedure to set the default screen displayed when you select the [**Send**] key. **Value: Destination, Address Book**
Send and Forward		Set whether to send the original to another destination and store it when sending images.
	Forward	Set the rule to send the original. **Value: Off, On** **NOTE** When selecting [**On**], select rules to forward from [**E-mail**], [**Folder (SMB)**], [**Folder (FTP)**] and [**FAX**]*1.
	Destination	Set the destination to which the original is forwarded. One destination can be set. You can check and edit the set address. Follow the steps below to register the destination. • Address Book • Address Entry Specifying Destination (page 5-30)

*1 Only on products with the fax function installed.
*2 Also applies when sending the fax.

FAX

[**System Menu/Counter**] key > [▲] [▼] key > [**FAX**] > [**OK**] key

Configure settings for FAX.

FAX Operation Guide

Document Box

[**System Menu/Counter**] key > [▲] [▼] key > [**Document Box**] > [**OK**] key

Configures settings related to the Job Box, Sub Address Box and Polling Box.

Item		Description
Sub Address Box[*1]		**FAX Operation Guide**
Job Box		Configure settings for Job Box.
	Quick Copy Jobs	To maintain free space on the box, you can set the maximum number of stored jobs. **Value: number between 0 and 300** **NOTE** When 0 is set, Quick Copy cannot be used.
	JobRet. Deletion	This setting specifies that documents, such as Private Printing, Quick Copying, or Proof and Hold Printing, saved temporarily in the job box are automatically deleted after they have been saved for a set time. **Value: Off, 1 hour, 4 hours, 1 day, 1 week** **NOTE** This function is valid for documents saved after the function is set. Regardless of this function setting, temporary documents are deleted when the power switch is turned off.
Polling Box[*1]		**FAX Operation Guide**
Select Key Set.		Commonly used printing and storing functions can be registered to the Select key. Functions used when printing and when saving can both be registered. Functions can be easily configured by selecting the Select key. **Value** **Print: None, Collate, Paper Selection, Duplex, EcoPrint, File Name Entry, JobFinish Notice, Print Override, Encrypted PDF[*2], JPEG/TIFF Print[*2], XPS FitTo Page[*2], Del. after Print[*3]** **Store: None, Color Selection[*4], Original Size, Original Image, Scan Resolution, Storing Size[*4], Zoom[*4], Orig. Orientation, Mixed Size Org., Continuous Scan, File Format[*4], File Separation[*4], File Name Entry, JobFinish Notice, Density, Sharpness[*4], Contrast[*4], Backgrnd Density[*4], Skip Blank Page**

*1 Only on products with the fax function installed.
*2 Only displayed when printing from USB memory.
*3 Only displayed when printing from Sub Address Box.
*4 Not displayed when saving to Polling Box.

Edit Destination

Address Book

[**System Menu/Counter**] key > [▲] [▼] key > [**Edit Destination**] > [**OK**] key > [▲] [▼] key > [**Address Book**] > [**OK**] key

Configure settings for address book.

Adding a Destination (Address Book) (page 3-18)

Print List

[**System Menu/Counter**] key > [▲] [▼] key > [**Edit Destination**] > [**OK**] key > [▲] [▼] key > [**Print List**] > [**OK**] key

FAX Operation Guide

AddBookDefaults

[**System Menu/Counter**] key > [▲] [▼] key > [**Edit Destination**] > [**OK**] key > [▲] [▼] key > [**AddBookDefaults**] > [**OK**] key

NOTE

This function does not appear when the External Address Book is not set.

Item	Description
Address Book	Set the type of address book that appears when the address book is displayed. **Value: Machine AddrBook, Ext Address Book**

Adjust/Maint.

[**System Menu/Counter**] key > [▲] [▼] key > [**Adjust/Maint.**] > [**OK**] key

Adjust printing quality and conduct machine maintenance.

Item		Description
Copy Denst. Adj.		Adjust copy density. **Value: -3 Lighter, -2, -1, 0 Normal, +1, +2, +3 Darker**
Send/Box Density		Adjust scan density when sending or storing the data in Document Box. **Value: -3 Lighter, -2, -1, 0 Normal, +1, +2, +3 Darker**
Contrast (Copy)		Increases or decreases the overall contrast of copies. **Value: -3, -2, -1, 0, 1, 2, 3**
Contrast (Send)		Increases or decreases the overall contrast when documents are sent or saved in a document box. **Value: -3, -2, -1, 0, 1, 2, 3**
Background Density		Darkens or lightens overall background density adjustment.
	Copy (Auto)	Darkens or lightens overall background density adjustment during copying. **Value: -3 Lighter, -2, -1, 0 Normal, +1, +2, +3 Darker**
	Send/Box (Auto)	Darkens or lightens overall background density when sending images or storing them in the Document Box. **Value: -3 Lighter, -2, -1, 0 Normal, +1, +2, +3 Darker**
Print Density		Adjust print density. Adjustment can be made in 5 levels. **Value: 1 (Lighter) to 5 (Darker)**
AutoColorCorrect		This setting allows you to adjust the detection level used by the machine to determine whether the original is color or black and white during Auto Color Mode. Setting a lower value will result in more originals being identified as color, while a larger value will tend to increase the number of originals being identified as black and white. **Value: 1 to 5**
Correct. Bk Line		Correct fine lines (streaks caused by contamination), which may appear on the image, when the document processor is used. **Value: Off, On**
Service Setting		Settings for machine maintenance and inspection. This menu is primarily used by service technicians to perform maintenance.

9 User Authentication and Accounting (User Login, Job Accounting)

This chapter explains the following topics:

Overview of User Login Administration 9-2
Managing the Job Account from PC 9-2
Enabling User Login Administration 9-3
Setting User Login Administration 9-5
Authentication Security 9-5
Adding a User (Local User List) 9-6
Changing User Properties 9-8
User Login Administration for Printing 9-11
Managing the Users to Scan Using TWAIN 9-12
Managing the Users to Scan Using WIA 9-13
Managing the Users that Send Faxes from a PC 9-14
Group Authorization Settings 9-15
Guest Authorization Set. 9-16
Obtain NW User Property 9-19
ID Card Settings 9-20
PIN Login Settings 9-21
Using User Login Administration 9-22
Login/Logout 9-22
Overview of Job Accounting 9-23
To Manage the Number of Sheets Used on Jobs Printed from a PC 9-23
Enabling Job Accounting 9-24
Job Accounting Access 9-25
Setting an Account 9-26
Adding an Account 9-26
Restricting the Use of the Machine 9-28
Editing an Account 9-29
Deleting an Account 9-30
Job Accounting for Printing 9-31
Job Accounting for Scan Using TWAIN 9-32
Job Accounting for Scan Using WIA 9-33
Job Accounting for the FAX Transmitted from a Computer 9-34
Configuring Job Accounting 9-35
Default Setting 9-35
Counting the Number of Pages Printed 9-36
Print Accounting Report 9-37
Using Job Accounting 9-38
Login/Logout 9-38
Unknown User Settings 9-39
Unknown ID Job 9-39
Registering Information for a User whose ID is Unknown 9-40

Overview of User Login Administration

User login administration specifies how the user access is administered on this machine. Enter a correct login user name and password for user authentication to login.

1 Enable User Login Administration (page 9-3)

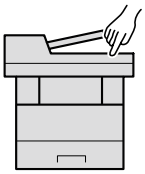

2 Set the user (page 9-6)

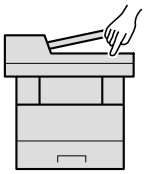

3 Enter the login user name and password and execute the job (page 2-15)

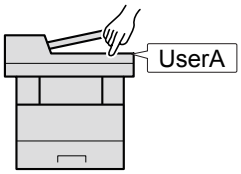

Access are in three levels - "User", "Administrator", and "Machine Administrator". The security levels can be modified only by the "Machine Administrator".

Managing the Job Account from PC

In addition to the above settings, the following are necessary to manage the job account from PC.

To Manage the Users to Print from PCs

Printer driver settings are necessary to manage the users that print on the machine from PCs.

1 Set the User Login Administration on the printer driver (page 9-11)

2 Print

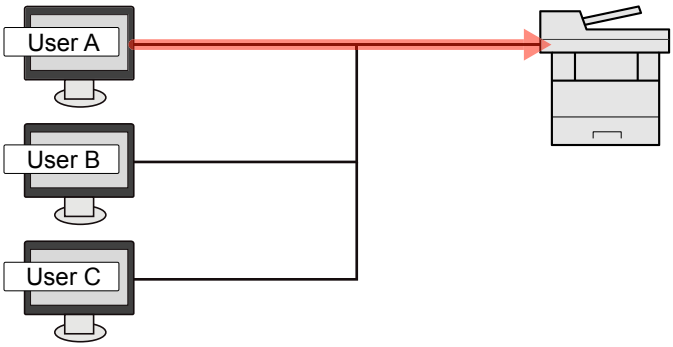

Managing the Users to Use TWAIN for Scanning

TWAIN driver settings on the PC are necessary to manage the users that use TWAIN for scanning.

Managing the Users to Scan Using TWAIN (page 9-12)

Managing the Users to Use WIA for Scanning

WIA driver settings on the PC are necessary to manage the users that use WIA for scanning.

Managing the Users to Scan Using WIA (page 9-13)

Managing the Users to Send Faxes from a PC

FAX driver settings on the PC are necessary to manage the users that send faxes from a PC.

Managing the Users that Send Faxes from a PC (page 9-14)

Fax functionality can only be used on products equipped with fax capability.

Enabling User Login Administration

Select one of the following authentication methods:

Item	Descriptions
Local Authentication	User authentication based on user properties on the local user list stored in the machine.
Network Authentication	User authentication based on Authentication Server. Use a user property stored in Authentication Server to access the network authentication login page.

1 Display the screen.

1 [**System Menu/Counter**] key > [▲] [▼] key > [**User/Job Account**] > [**OK**] key

NOTE

If the login user name entry screen appears during operations, enter a login user name and password, and select [**Login**]. For this, you need to login with administrator privileges.

The factory default login user name and login password are set as shown below.

Model Name	Login User Name	Login Password
ECOSYS M2235dn/ECOSYS M2735dn	3500	3500

2 [▲] [▼] key > [**User Login Set.**] > [**OK**] key

2 Configure the settings.

1 [▲] [▼] key > [**User Login**] > [**OK**] key > [▲] [▼] key > [**Local Authentic.**] or [**Netwk Authentic.**] > [**OK**] key

NOTE

Select [**Off**] to disable user login administration.

When selecting [Netwk Authentic.]

1 [▲] [▼] key > [**NTLM**], [**Kerberos**] or [**Ext.**] > [**OK**] key

2 Enter the host name (64 characters or less) for the Authentication Server and select the [**OK**] key.

3 Select the domain name for the Authentication Server, and select the [**OK**] key.

If the domain has not been set, select the number where "----------" is displayed and select [**Menu**]. Select [**Edit**] and select the [**OK**] key then enter the domain name (in 256 characters or less). Select the [**OK**] key and the domain will be registered.

To edit or delete a domain name that has already been registered, select that domain name and select [**Menu**].

NOTE

Up to 10 domain names can be registered.

4 When selecting [**Ext.**] as the server type, enter the port number and select the [**OK**] key.

NOTE

If the login user name and password are rejected, check the following settings.

- Network Authentication setting of the machine
- User property of the Authentication Server
- Date and time setting of the machine and the Authentication Server

If you cannot login because of the setting of the machine, login with any administrator registered in the local user list and correct the settings.

Setting User Login Administration

This registers, alters and deletes users and configures the settings for User Login Administration.

Authentication Security

If user authentication is enabled, configure the user authentication settings.

User Account Lockout Setting

You can prohibit the use of a user account if an incorrect password is entered repeatedly to login with that account.

1 Display the screen.

1 [**System Menu/Counter**] key > [▲] [▼] key > [**User/Job Account**] > [**OK**] key

NOTE

If the login user name entry screen appears during operations, enter a login user name and password, and select [**Login**]. For this, you need to login with administrator privileges.

The factory default login user name and login password are set as shown below.

Model Name	Login User Name	Login Password
ECOSYS M2235dn/ECOSYS M2735dn	3500	3500

2 [▲] [▼] key > [**User Login Set.**] > [**OK**] key > [▲] [▼] key > [**Account Lockout**] > [**OK**] key

2 Configure the settings.

The following settings can be selected.

Item		Descriptions
Lockout		Select whether or not account lockout policy is enabled. **Value: Off, On**
Lockout Policy		Specify the conditions and the extent to which the account lockout is applied.
	Number of Retries	Specify how many login retries are allowed until the account is locked out. **Value: 1 to 10 times**
	Lockout Duration	Specify how long the account is to be locked out until it is unlocked. **Value: 1 to 60 minutes**
	Lockout Target	Specify the extent to which the account lockout is applied. [**Remote Only**] locks out all operations from outside the operation panel. **Value: All, Remote Only**
Locked out Users		Displays a list of locked out users. **To cancel the locks:** Select the [▲] or [▼] key to select the user in the list, and [**Select**]. A checkmark will be placed on the right of the selected user. Select [**Menu**]. Select [**Unlock**] and the [**OK**] key.

Adding a User (Local User List)

This adds a new user. You can add up to 100 users (including the default login user name).

NOTE

By default, one of each default user with machine administrator rights and administrator privileges is already stored. Each user's properties are:

Machine Administrator

User Name: DeviceAdmin

Login User Name:
ECOSYS M2235dn/ECOSYS M2735dn: 3500

Login Password:
ECOSYS M2235dn/ECOSYS M2735dn: 3500
Access Level: Machine Administrator

Administrator

User Name: Admin

Login User Name: Admin

Login Password: Admin

Access Level: Administrator

* Upper case and lower case letters are distinguished (case sensitive).

It is recommended to periodically change the user name, login user name and login password regularly for your security.

1 Display the screen.

1 [**System Menu/Counter**] key > [▲] [▼] key > [**User/Job Account**] > [**OK**] key

NOTE

If the login user name entry screen appears during operations, enter a login user name and password, and select [**Login**]. For this, you need to login with administrator privileges.

The factory default login user name and login password are set as shown below.

Model Name	Login User Name	Login Password
ECOSYS M2235dn/ECOSYS M2735dn	3500	3500

2 [▲] [▼] key > [**User Login Set.**] > [**OK**] key > [▲] [▼] key > [**Local User List**] > [**OK**] key > [**Menu**] > [▲] [▼] key > [**Add User**] > [**OK**] key

2 Enter the user information.

1 Enter the name displayed on the user list (up to 32 characters) and select the [**OK**] key.

NOTE
For details on entering characters, refer to the the following:

Character Entry Method (page 11-8)

2 Enter the login user name to login (up to 64 characters) and select the [**OK**] key.

NOTE
The same login user name cannot be registered.

3 To enter detailed user information, select [▲] [▼] key > [**Detail**] > [**OK**] key
To exit the operation, select [▲] [▼] key > [**Exit**] > [**OK**] key

4 Enter the detailed user information.

Select [**Edit**], [**Change**] or [**Detail**] on each item, enter the information and then select the [**OK**] key. Select the [►] key to view the next screen. Select the [◄] key to return to the previous screen. The table below explains the user information to be registered.

Item	Descriptions
User Name*1	Enter the name displayed on the user list (up to 32 characters).
Login User Name*1	Enter the login user name to login (up to 64 characters). The same login user name cannot be registered.
Login Password	Enter the password to login (up to 64 characters). Reenter the same password for confirmation and select the [**OK**] key.
Access Level*1	Select "Administrator" or "User" for user access privileges.
Account Name	Add an account where the user belongs. The user, who registered his/her account name, can login without entering the account ID. Overview of Job Accounting (page 9-23)
ID Card Information	Register ID card information. Select [**Change**] > [▲] [▼] key > [**Read**] > [**OK**] key. To delete IC card information, select [**Change**] > [▲] [▼] key > [**Delete**] > [**OK**] key. **NOTE** This function is displayed when the optional Card Authentication Kit is activated. Card Authentication Kit(B) "Card Authentication Kit" (page 11-4)

*1 Mandatory at user registration.

3 Select the [OK] key.

A new user is added on the local user list.

Changing User Properties

Types of user properties that could be changed may be different depending on user access privilege.

NOTE

To change the user information of the machine administrator, you must log in with machine administrator authority. You can only view user information if you log in as a regular user.

The factory default login user name and login password are set as shown below.

Model Name	Login User Name	Login Password
ECOSYS M2235dn/ECOSYS M2735dn	3500	3500

For a user with administrator rights who logs in

User properties can be changed and users can be deleted. The items, which can be added, are all able to be changed.

1 Display the screen.

1 [**System Menu/Counter**] key > [▲] [▼] key > [**User/Job Account**] > [**OK**] key

NOTE

If the login user name entry screen appears during operations, enter a login user name and password, and select [**Login**]. For this, you need to login with administrator privileges.

The factory default login user name and login password are set as shown below.

Model Name	Login User Name	Login Password
ECOSYS M2235dn/ECOSYS M2735dn	3500	3500

2 [▲] [▼] key > [**User Login Set.**] > [**OK**] key > [▲] [▼] key > [**Local User List**] > [**OK**] key

2 Change the user properties.

Changing user properties

1 Select the user whose properties you wish to change, and the [**OK**] key.

2 Refer to step 2 of "Adding a User (Local User List)" to change a user property.

➡ Adding a User (Local User List) (page 9-6)

3 [**OK**] key > [**Yes**]

The user information is changed.

Deleting a user

1 Select the user whose properties you wish to delete, and [**Menu**].

2 [▲] [▼] key > [**Delete**] > [**OK**] key > [**Yes**]

The selected user will be deleted.

NOTE

The default user with machine administrator rights cannot be deleted.

To change the user information of logged in user (User Property)

These users can partially change their own user properties including user name and login password.

Although "Login User Name", "Access Level", or "Account Name" cannot be changed, the users can check the present status.

1 Display the screen.

[**System Menu/Counter**] key > [▲] [▼] key > [**User Property**] > [**OK**] key

2 Change the user properties.

1 Refer to step 2 of "Adding a User (Local User List)" to change a user property.

Adding a User (Local User List) (page 9-6)

Item	Description
User Name	Changes the name shown on the user list. Up to 32 characters can be entered.
Login User Name	Displays the login user name that is entered at login.
Login Password	Changes the password that is entered at login. Up to 64 characters can be entered.
Access Level	Displays the user's access level.
Account Name	Displays the account where the user belongs.
ID Card Information	Displays the ID card information of the logged in user. **NOTE** This function is displayed when the optional Card Authentication Kit is activated. Optional Applications (page 11-6) This function does not appear when the server type is set to [**Ext.**] in Network Authentication, and logged in with the user account certificated in the server specified as the [**Ext.**] server type.

2 [**OK**] key > [**Yes**]

The user information is changed.

User Login Administration for Printing

It is possible to manage the users that print on this machine from a PC.

Setting Printer Driver

To manage the users that print on this machine from a PC, the following settings are necessary in the printer driver. Instructions are based on interface elements as they appear in Windows 8.1.

1 Display the screen.

1 Select [**Settings**] in charms on Desktop, and select [**Control Panel**], and then [**Devices and Printers**].

> **NOTE**
> In Windows 7, click [**Start**] button on the Windows, and then click [**Devices and Printers**].

2 Right-click the printer driver icon of the machine, and click the [**Printer properties**] menu of the printer driver.

3 Click [**Administrator**] on the [**Device Settings**] tab.

2 Configure the settings.

1 Select [**User Login**] on the [**User Login**] tab.

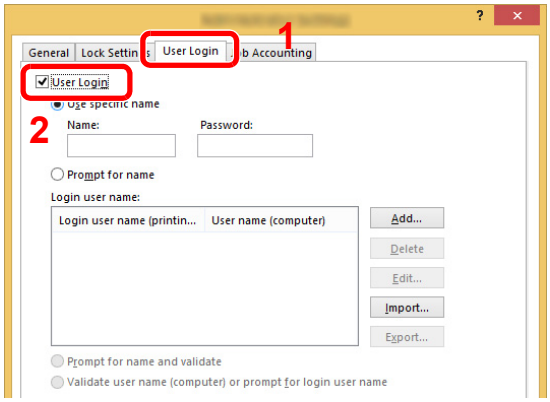

2 Set the User Login Administration.

[**Use specific name**]: This option can be used to specify a user name and password to use the same User login for every print job. If this option is selected, the user does not have to type the name and password for each print job.

[**Prompt for name**]: A screen for entering the user name and password will be displayed when attempting a printing. The user name and password must be entered each time a printing is attempted.

[**Prompt for name and validate**]: A screen for entering the user name and password will be displayed when attempting a printing. The user name and password stored in the Login user name list needs to be entered. The user name and password must be entered each time a printing is attempted.

[**Validate user name (computer) or prompt for login user name**]: When printing, the Windows user name is searched in the "Login user names" and printing is possible if the name is registered. If the name is not registered, the printing will be canceled for users with only user authority. If the user has administrator privileges, the screen to enter the user name and password will appear.

3 Click [**OK**].

NOTE

For other settings of job accounting, refer to the following:

Printer Driver User Guide

Managing the Users to Scan Using TWAIN

It is possible to manage the users that scan using TWAIN.

Setting TWAIN Driver

To manage the users that scan using TWAIN, the following settings are necessary in the TWAIN driver. Instructions are based on interface elements as they appear in Windows 8.1.

1 Display the screen.

1 Select [**Search**] in charms, and enter "TWAIN Driver Setting" in the search box. Click [**TWAIN Driver Setting**] in the search list then the TWAIN Driver Setting screen appears.

NOTE

In Windows 7, select [**Start**] button on the Windows, [**All Programs**], [**Kyocera**] and then [**TWAIN Driver Setting**].

2 Select the machine, and click [**Edit**].

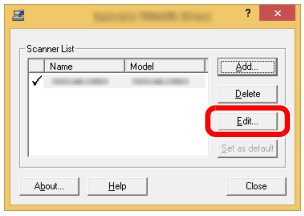

2 Configure the settings.

1 Click [**User Authentication Settings**].

2 Select the checkbox beside [**Authentication**], and enter Login User Name and Password.



3 Click [**OK**].

Managing the Users to Scan Using WIA

It is possible to manage the users that scan using WIA.

Setting WIA Driver

To manage the users that scan using WIA, the following settings are necessary in the WIA driver. Instructions are based on interface elements as they appear in Windows 8.1.

1 Display the screen.

1 Click [**Search**] in charms, and enter "Scanner" in the search box. Click [**View scanners and cameras**] in the search list then the Scanners and Cameras screen appears.

> **NOTE**
> In Windows 7, click [**Start**] button on the Windows and enter [**Scanner**] in [**Program and File Search**]. Click [**View scanners and cameras**] in the search list then the Scanners and Cameras screen appears.

2 Select the same name as this machine from WIA Drivers, and press [**Properties**].

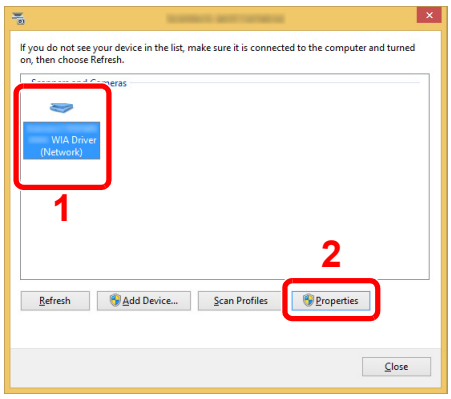

2 Configure the settings.

1 Select the checkbox beside [**Authentication**] on the [**Settings**] tab, and enter Login User Name and Password.

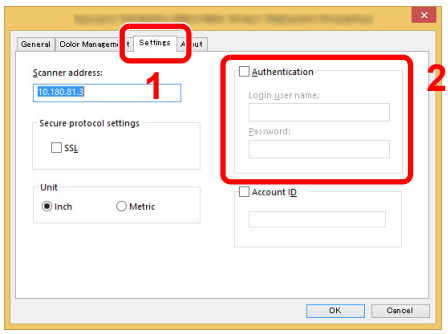

2 Click [**OK**].

Managing the Users that Send Faxes from a PC

It is possible to manage the users that send faxes from a PC.

NOTE

FAX functions are available only on products with the fax function installed.

Setting FAX Driver

To manage the users that send faxes from a PC, the following settings are necessary in the FAX driver. Instructions are based on interface elements as they appear in Windows 8.1.

1 Display the screen.

1 Select [**Settings**] in charms on Desktop, and select [**Control Panel**], and then [**Devices and Printers**].

NOTE

In Windows 7, click [**Start**] button on the Windows, and then click [**Devices and Printers**].

2 Right-click the printer driver icon of the machine, and click the [**Printer properties**] menu of the printer driver.

3 Click [**FAX TX Setting**] on the [**Printing Preferences**] window.

2 Configure the settings.

1 Select [**User Login**] on the [**Authentication**] tab.

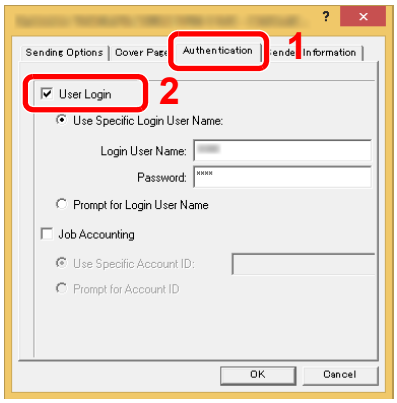

2 Set the User Login Administration.

[**Use Specific Login User Name**]: This option can be used to specify a user name and password to use the same User login for every FAX job. If this option is selected, the user does not have to type the name and password for each FAX job.

[**Prompt for Login User Name**]: A screen for entering the user name and password will be displayed when attempting a transmission. The user name and password must be entered each time a transmission is attempted.

3 Click [**OK**].

Group Authorization Settings

Set restrictions of the machine usage by each individual group registered in the authentication server.

NOTE

- To use the group authorization settings, [**Netwk Authentic.**] must be selected for the authentication method in "Enabling User Login Administration". Select "On" for "LDAP" in "Protocol Settings".

Enabling User Login Administration (page 9-3)
ProtocolSettings (page 8-9)

- Setting to use group authorization is performed from the operation panel. The groups should be registered with Command Center RX.

Command Center RX User Guide

Group Authorization

1 Display the screen.

1 [**System Menu/Counter**] key > [▲] [▼] key > [**User/Job Account**] > [**OK**] key

NOTE

If the login user name entry screen appears during operations, enter a login user name and password, and select [**Login**]. For this, you need to login with administrator privileges.

The factory default login user name and login password are set as shown below.

Model Name	Login User Name	Login Password
ECOSYS M2235dn/ECOSYS M2735dn	3500	3500

2 [▲] [▼] key > [**User Login Set.**] > [**OK**] key

2 Configure the setting.

[▲] [▼] key > [**Group Auth.**] > [**OK**] key > [▲] [▼] key > [**Off**] or [**On**] > [**OK**] key

Guest Authorization Set.

When User Login Administration is enabled, set the functions that guest users who cannot log in to the machine are allowed to use.

NOTE

To use Guest Authorization Set., User Login Administration must be enabled in "Enabling User Login Administration".

Enabling User Login Administration (page 9-3)

Enabling Guest Authorization

1 Display the screen.

1 [**System Menu/Counter**] key > [▲] [▼] key > [**User/Job Account**] > [**OK**] key

NOTE

If the login user name entry screen appears during operations, enter a login user name and password, and select [**Login**]. For this, you need to login with administrator privileges.

The factory default login user name and login password are set as shown below.

Model Name	Login User Name	Login Password
ECOSYS M2235dn/ECOSYS M2735dn	3500	3500

2 [▲] [▼] key > [**User Login Set.**] > [**OK**] key > [▲] [▼] key > [**Guest Auth. Set.**] > [**OK**] key > [▲] [▼] key > [**Guest Auth.**] > [**OK**] key

2 Configure the setting.

[▲] [▼] key > [**On**] or [**Off**] > [**OK**] key

NOTE

If the guest authorization setting is enabled, the [**Authentication/Logout**] key must be selected when logging in.

In the guest user default settings, only monochrome copying can be used. If you wish to use a different function, log in as a user who can use that function, or change the settings in the guest properties.

Configuring Guest Property

Register guest user information and functions that are restricted.

The table below explains the user information to be registered.

Item	Descriptions
User Name	Enter the name displayed on the user list (up to 32 characters). The default setting is "Guest User".
Access Level	The authority of the user appears. This cannot be changed.
Account Name	Add an account where the user belongs.
Auth. Rules	Set usage authority for each user. The items you can restrict the access level with are as follows. **Print Restrict.:** Select whether or not use of the print function of the printer is prohibited. **Copy Restrict.** Select whether or not use of the copy print function is prohibited. **Send Restrict** Select whether or not use of the send function is prohibited. **FAX Restrict.**[*1] Select whether or not use of the fax send function is prohibited. **Storing in Box:** Select whether or not use of the box store function is prohibited. **StoringinMemory:** Select whether or not use of the removable memory store function is prohibited.

*1 Only on products with the fax function installed.

1 Display the screen.

1 [**System Menu/Counter**] key > [▲] [▼] key > [**User/Job Account**] > [**OK**] key

NOTE

If the login user name entry screen appears during operations, enter a login user name and password, and select [**Login**]. For this, you need to login with administrator privileges.

The factory default login user name and login password are set as shown below.

Model Name	Login User Name	Login Password
ECOSYS M2235dn/ECOSYS M2735dn	3500	3500

2 [▲] [▼] key > [**User Login Set.**] > [**OK**] key

2 Configure the settings.

1 [▲] [▼] key > [**Guest Auth. Set.**] > [**OK**] key > [▲] [▼] key > [**Guest Property**] > [**OK**] key

2 Register guest user information and functions that are restricted.

Select [**Edit**], [**Change**] or [**Detail**] on each item, enter the information and then select the [**OK**] key. Select the [►] key to view the next screen. Select the [◄] key to return to the previous screen.

3 Select the [OK] key.

Obtain NW User Property

Set the required information to obtain the network user property from the LDAP server. The user name obtained with this setting is shown in the user information, the status confirmation screen, and the header of E-mail.

NOTE

- To obtain the network user property from the LDAP server, [**Netwk Authentic.**] must be selected for the authentication method in "Enabling User Login Administration". Select "On" for "LDAP" in "ProtocolSettings".

Enabling User Login Administration (page 9-3)
ProtocolSettings (page 8-9)

- Setting to obtain network user information is performed from the operation panel. The details of the information to be obtained should be set with Command Center RX.

Command Center RX User Guide

1 Display the screen.

1 [**System Menu/Counter**] key > [▲] [▼] key > [**User/Job Account**] > [**OK**] key

NOTE

If the login user name entry screen appears during operations, enter a login user name and password, and select [**Login**]. For this, you need to login with administrator privileges.

The factory default login user name and login password are set as shown below.

Model Name	Login User Name	Login Password
ECOSYS M2235dn/ECOSYS M2735dn	3500	3500

2 [▲] [▼] key > [**User Login Set.**] > [**OK**] key

2 Configure the settings.

[▲] [▼] key > [**NW User Property**] > [**OK**] key > [▲] [▼] key > [**Off**] or [**On**] > [**OK**] key

ID Card Settings

If ID card authentication is enabled, select the authentication type.

NOTE

This functions appears when the Card Authentication Kit is activated.

Optional Applications (page 11-6)

1 Display the screen.

1 [**System Menu/Counter**] key > [▲] [▼] key > [**User/Job Account**] > [**OK**] key

NOTE

If the login user name entry screen appears during operations, enter a login user name and password, and select [**Login**]. For this, you need to login with administrator privileges.

The factory default login user name and login password are set as shown below.

Model Name	Login User Name	Login Password
ECOSYS M2235dn/ECOSYS M2735dn	3500	3500

2 [▲] [▼] key > [**User Login Set.**] > [**OK**] key

2 Configure the settings.

[▲] [▼] key > [**ID Card Settings**] > [**OK**] key

The following settings can be selected.

Item	Descriptions
Key Login	When ID card authentication is enabled, select whether or not login by keyboard is allowed. **Value: Permit, Prohibit**
Additional Auth.[*1]	Select whether or not to require password entry after authenticating by ID card. **Value: Off, Use Password, Use PIN Code**[*2]

*1 This function does not appear when the server type is set to [**NTLM**] or [**Kerberos**] in "Network Authentication".

*2 This function appear when [**Network Authentication**] is selected for the authentication method and the server type is set to [**Ext.**] in "Network Authentication".

PIN Login Settings

NOTE

This setting is only displayed when [**Network Authentication**] must be selected for the authentication method and the server type is set to [**Ext.**] in "Network Authentication".

Enabling User Login Administration (page 9-3)

1 Display the screen.

1 [**System Menu/Counter**] key > [▲] [▼] key > [**User/Job Account**] > [**OK**] key

NOTE

If the login user name entry screen appears during operations, enter a login user name and password, and select [**Login**]. For this, you need to login with administrator privileges.

The factory default login user name and login password are set as shown below.

Model Name	Login User Name	Login Password
ECOSYS M2235dn/ECOSYS M2735dn	3500	3500

2 [▲] [▼] key > [**User Login Set.**] > [**OK**] key

2 Configure the settings.

[▲] [▼] key > [**PIN Login**] > [**OK**] key > [▲] [▼] key > Select [**Off**] or [**On**] > [**OK**] key

Using User Login Administration

This section explains procedures while setting job accounting.

Login/Logout

If user login administration is enabled, the login user name and login password entry screen appears each time you use this machine.

Login

If the login user name entry screen appears during operations, log in by referring to the following:

Login (page 2-15)

Logout

When the operations are complete, select the [**Authentication/Logout**] key to return to the login user name and login password entry screen.

Overview of Job Accounting

Job accounting manages the copy/print/scan/FAX count accumulated by individual accounts by assigning an ID to each account.

1 Enable job accounting. (page 9-24)

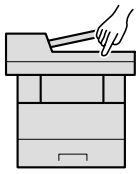

2 Setting an account. (page 9-26)

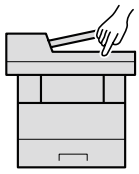

3 Enter the assigned account ID when performing the job. (page 9-38)

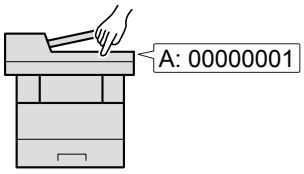

4 Count the number of pages copied, printed, scanned and faxed.

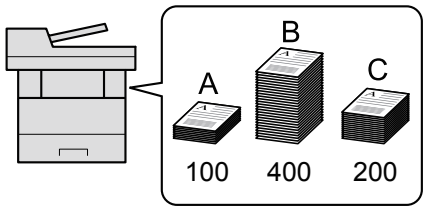

To Manage the Number of Sheets Used on Jobs Printed from a PC

To manage the number of jobs to be printed from the PC on the network, you need to configure settings by using the printer driver on the PC.

1 Set Job Accounting for the PC on the network by using the printer driver. (page 9-31)

2 Execute printing.

3 Count the number of pages printed.

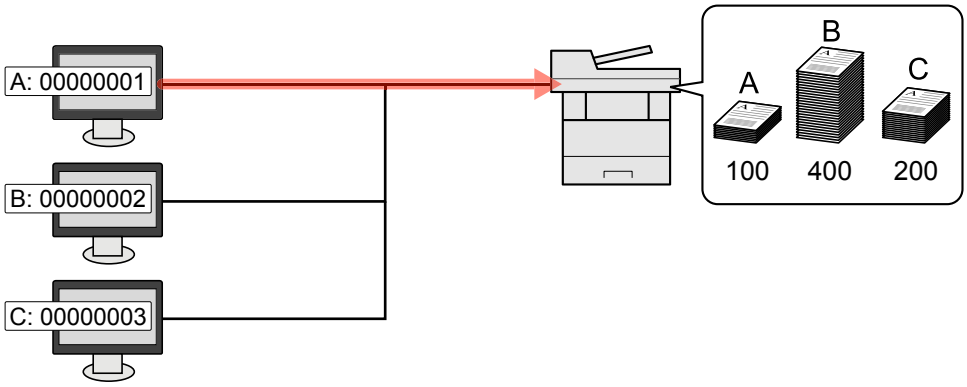

Managing the Scan Job Account by Using TWAIN

To manage the scan job account by using TWAIN, you need to configure the TWAIN driver settings on the computer connected to the machine.

Job Accounting for Scan Using TWAIN (page 9-32)

Managing the Scan Job Account by Using WIA

To manage the scan job account by using WIA, you need to configure the WIA driver settings on the computer connected to the machine.

Job Accounting for Scan Using WIA (page 9-33)

Managing the FAX Job Transmitted from a PC

To manage the number of FAX jobs transmitted from the PC, you need to configure the settings by using the FAX Driver on the PC.

Job Accounting for the FAX Transmitted from a Computer (page 9-34)

Fax functionality can only be used on products equipped with fax capability.

Enabling Job Accounting

1 Display the screen.

1 [**System Menu/Counter**] key > [▲] [▼] key > [**User/Job Account**] > [**OK**] key

NOTE

If the login user name entry screen appears during operations, enter a login user name and password, and select [**Login**]. For this, you need to login with administrator privileges.

The factory default login user name and login password are set as shown below.

Model Name	Login User Name	Login Password
ECOSYS M2235dn/ECOSYS M2735dn	3500	3500

2 [▲] [▼] key > [**Job Account.Set.**] > [**OK**] key

2 Configure the settings.

[▲] [▼] key > [**Job Accounting**] > [**OK**] key > [▲] [▼] key > [**On**] > [**OK**] key

NOTE

- To disable job accounting, select [**Off**].
- When the display returns to System Menu default screen, logout is automatically executed and the screen to enter the Account ID appears. To continue the operation, enter the Account ID.

Job Accounting Access

1 Display the screen.

1 [**System Menu/Counter**] key > [▲] [▼] key > [**User/Job Account**] > [**OK**] key

> **NOTE**
> If the login user name entry screen appears during operations, enter a login user name and password, and select [**Login**]. For this, you need to login with administrator privileges.
>
> The factory default login user name and login password are set as shown below.

Model Name	Login User Name	Login Password
ECOSYS M2235dn/ECOSYS M2735dn	3500	3500

2 [▲] [▼] key > [**Job Account.Set.**] > [**OK**] key

2 Configure the settings.

[▲] [▼] key > [**AccountingAccess**] > [**OK**] key > [▲] [▼] key > [**Local**] or [**Network**] > [**OK**] key

Setting an Account

You can add, change and delete an account and set the restriction for each account.

Adding an Account

Up to 100 individual accounts can be added. The following entries are required.

Item	Descriptions
Account Name	Enter the account name (up to 32 characters).
Account ID	Enter the account ID as many as eight digits (between 0 and 99999999).
Restriction	This prohibits printing/scanning or restricts the number of sheets to load. Restricting the Use of the Machine (page 9-28)

1 Display the screen.

1 [**System Menu/Counter**] key > [▲] [▼] key > [**User/Job Account**] > [**OK**] key

NOTE

If the login user name entry screen appears during operations, enter a login user name and password, and select [**Login**]. For this, you need to login with administrator privileges.

The factory default login user name and login password are set as shown below.

Model Name	Login User Name	Login Password
ECOSYS M2235dn/ECOSYS M2735dn	3500	3500

2 [▲] [▼] key > [**Job Account.Set.**] > [**OK**] key > [▲] [▼] key > [**Account. List**] > [**OK**] key > [**Menu**] > [▲] [▼] key > [**Add Account**] > [**OK**] key

2 Enter the account information.

1 Enter the account name > [**OK**] key

NOTE

For details on entering characters, refer to the the following:

Character Entry Method (page 11-8)

2 Enter the account ID > [**OK**] key

NOTE

Any "Account ID" that has already registered cannot be used. Enter any other account ID.

3 To apply restriction to the account ID, select [▲] [▼] key > [**Detail**] > [**OK**] key.

To exit the operation, select [▲] [▼] key > [**Exit**] > [**OK**] key.

4 Check the account name and account ID and set the use restrictions.

To change the details, select [**Edit**], enter the information and then select the [**OK**] key. Select the [►] key to view the next screen. Select the [◄] key to return to the previous screen.

Restricting the Use of the Machine (page 9-28)

5 Select the [**OK**] key.

A new account is added on the account list.

Restricting the Use of the Machine

This section explains how to restrict the use of the machine by account or the number of sheets available.

The items that can be restricted differ depending on whether "Individual" or "Total" is selected for "Copy/Print Count".

Copy/Print Count (page 9-35)

Restriction Items

"Individual" selected for Copy/Printer Count"Split" selected for Copy/Printer Count

Item	Descriptions
Print Restrict Copier	Limits the number of sheets used for copying.
Print Restrict Printer	Limits the number of sheets used for printing.
Scan Restrict. Others	Limits the number of sheets scanned (excludes copying).
FAX TX Restrict	Limits the number of sheets sent by fax. This is displayed only on products with the fax function installed.

"Total" selected for Copy/Printer Count

Item	Descriptions
Print Restrict	Limits the total number of sheets used for copying and printing.
Scan Restrict. Others	Limits the number of sheets scanned (excludes copying).
FAX TX Restrict	Limits the number of sheets sent by fax. This is displayed only on products with the fax function installed.

Applying Restriction

Item	Descriptions
Off	No restriction is applied.
Counter Limit[*1]	Restricts the print counter in one-page increments up to 9,999,999 copies.
Reject Usage	Restriction is applied.

*1 If [**Counter Limit**] is selected, the [**Limit Pages**] screen appears after the [**OK**] key is selected. Enter a counter limit on pages using the numeric keys, and select the [**OK**] key.

Editing an Account

1 Display the screen.

1 [**System Menu/Counter**] key > [▲] [▼] key > [**User/Job Account**] > [**OK**] key

NOTE

If the login user name entry screen appears during operations, enter a login user name and password, and select [**Login**]. For this, you need to login with administrator privileges.

The factory default login user name and login password are set as shown below.

Model Name	Login User Name	Login Password
ECOSYS M2235dn/ECOSYS M2735dn	3500	3500

2 [▲] [▼] key > [**Job Account.Set.**] > [**OK**] key > [▲] [▼] key > [**Account. List**] > [**OK**] key

2 Edit an account.

1 Select the account you want to change and select the [**OK**] key.

NOTE

The account information can be changed by selecting [**Menu**], selecting [**Detail/Edit**] and then selecting the [**OK**] key.

2 Refer to step 2 of "Adding an Account" and "Restricting the Use of the Machine" to change account information.

→ Adding an Account (page 9-26)
Restricting the Use of the Machine (page 9-28)

3 [**OK**] key > [**Yes**]

The account information is changed.

Deleting an Account

1 Display the screen.

1 [**System Menu/Counter**] key > [▲] [▼] key > [**User/Job Account**] > [**OK**] key

NOTE

If the login user name entry screen appears during operations, enter a login user name and password, and select [**Login**]. For this, you need to login with administrator privileges.

The factory default login user name and login password are set as shown below.

Model Name	Login User Name	Login Password
ECOSYS M2235dn/ECOSYS M2735dn	3500	3500

2 [▲] [▼] key > [**Job Account.Set.**] > [**OK**] key > [▲] [▼] key > [**Account. List**] > [**OK**] key

2 Delete an account.

1 Select the account you want to delete and [**Menu**].

2 [▲] [▼] key > [**Delete**] > [**OK**] key > [**Yes**]

The account is deleted.

Job Accounting for Printing

The number of jobs to be printed from the computer can be managed by Job Accounting.

Setting Printer Driver

To manage the number of jobs to be printed from the PC on the network, you need configure the following settings by using the printer driver on the PC. Instructions are based on interface elements as they appear in Windows 8.1.

1 Display the screen.

1 Select [**Settings**] in charms on Desktop, and select [**Control Panel**], and then [**Devices and Printers**].

> **NOTE**
> In Windows 7, click [**Start**] button on the Windows, and then click [**Devices and Printers**].

2 Right-click the printer driver icon of the machine, and click the [**Printer properties**] menu of the printer driver.

3 Click [**Administrator**] on the [**Device Settings**] tab.

2 Configure the settings.

1 Select [**Job accounting**] on the [**Job Accounting**] tab.

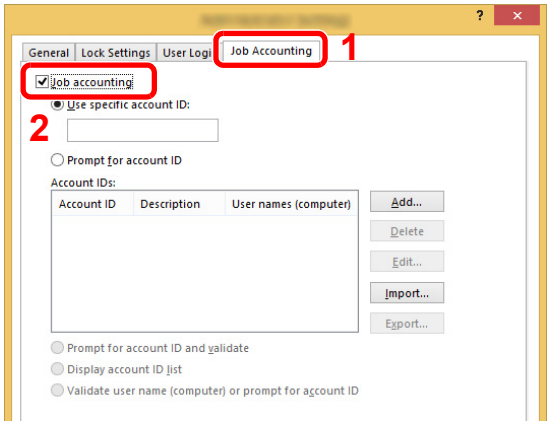

2 Set the Account ID.

[**Use specific account ID**]: Enter the Account ID. Printing will be performed using the entered Account ID. If this option is selected, the user does not have to enter the Account ID for each print job.

[**Prompt for account ID**]: A screen for entering the Account ID will be displayed when attempting a printing. The Account ID must be entered each time a printing is attempted.

[**Prompt for account ID and validate**]: A screen for entering the Account ID will be displayed when attempting a printing. The Account ID stored in the Account ID list needs to be entered. The Account ID must be entered each time a printing is attempted.

[**Display account ID list**]: The Account ID list is displayed when printing. The Account ID to be used needs to be selected from the list.

[**Validate user name (computer) or prompt for account ID**]: When printing, the Windows user name is searched in the "Account IDs" and printing is possible if the name is registered. If the Account ID is not registered, the screen for entering the Account ID will appear.

3 Click [**OK**].

NOTE

For other settings of job accounting, refer to the following:

Printer Driver User Guide

Job Accounting for Scan Using TWAIN

The number of jobs scanned by using TWAIN can be managed by Job Accounting.

Setting TWAIN Driver

To manage the number of jobs scanned by using TWAIN, you need to configure the following settings by using the TWAIN Driver on the computer. Instructions are based on interface elements as they appear in Windows 8.1.

1 Display the screen.

1 Select [**Search**] in charms, and enter "TWAIN Driver Setting" in the search box. Click [**TWAIN Driver Setting**] in the search list then the TWAIN Driver Setting screen appears.

NOTE

In Windows 7, select [**Start**] button on the Windows, [**All Programs**], [**Kyocera**] and then [**TWAIN Driver Setting**].

2 Select the machine, click [**Edit**].

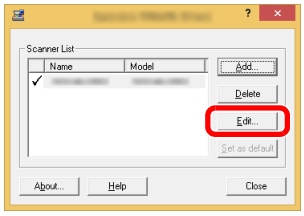

2 Configure the settings.

1 Click [**User Authentication Settings**].

2 Select the checkbox beside [**Account**], and enter the account ID.

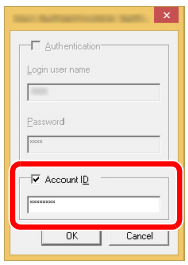

3 Click [**OK**].

Job Accounting for Scan Using WIA

The number of jobs scanned by using WIA can be managed by Job Accounting.

Setting WIA Driver

To manage the number of jobs scanned by using WIA, you need to configure the following settings by using the WIA Driver on the computer. Instructions are based on interface elements as they appear in Windows 8.1.

1 Display the screen.

1 Click [**Search**] in charms, and enter "Scanner" in the search box. Click [**View scanners and cameras**] in the search list then the Scanners and Cameras screen appears.

> **NOTE**
> In Windows 7, click [**Start**] button on the Windows and enter [**Scanner**] in [**Program and File Search**]. Click [**View scanners and cameras**] in the search list then the Scanners and Cameras screen appears.

2 Select the same name as this machine from WIA Drivers, and press [**Properties**].

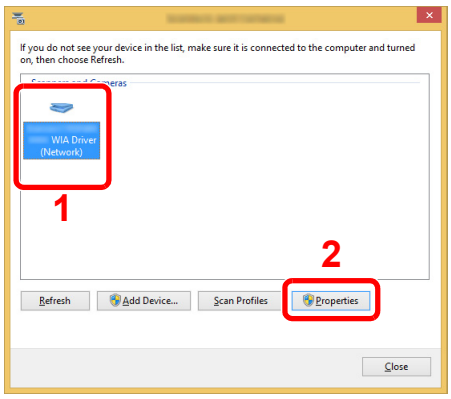

2 Configure WIA Driver.

1 Select the checkbox beside [**Account ID**] on the [**Settings**] tab, and enter the Account ID.

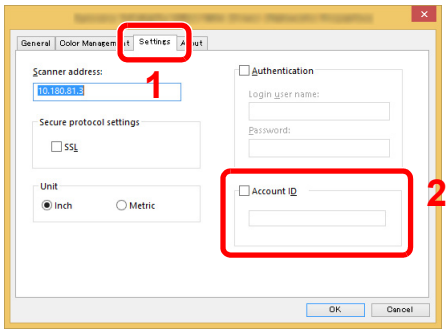

2 Click [**OK**].

Job Accounting for the FAX Transmitted from a Computer

The number of FAX jobs transmitted from the computer can be managed by Job Accounting.

NOTE
FAX functions are available only on products with the fax function installed.

Setting FAX Driver

To manage the number of FAX jobs transmitted from the computer, you need to configure the following settings by using the FAX Driver on the computer. Instructions are based on interface elements as they appear in Windows 8.1.

1 Display the screen.

1 Select [**Settings**] in charms on Desktop, and select [**Control Panel**], and then [**Devices and Printers**].

NOTE
In Windows 7, click [**Start**] button on the Windows, and then click [**Devices and Printers**].

2 Right click the name of the machine to be used as the FAX Driver and select [**Printing preferences**] from the resulting pull-down menu.

3 Click [**FAX TX Setting**] in the [**Printing Preferences**] window.

2 Configure the settings.

1 Select [**Job Accounting**] on the [**Authentication**] tab.

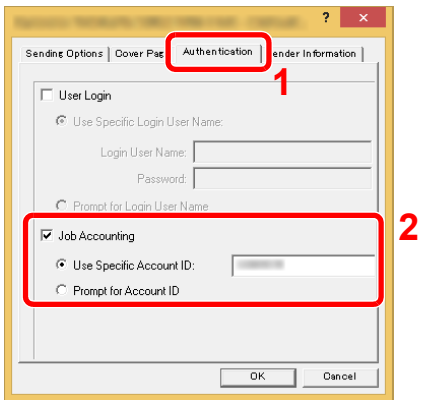

2 Set the Job Accounting.

[**Use Specific Account ID**]: This option can be used to specify an account ID to use the same Account ID for every FAX job. If this option is selected, the user does not have to enter the Account ID for each FAX job.

[**Prompt for Account ID**]: A screen for entering the Account ID will be displayed when attempting a transmission. The Account ID must be entered each time a transmission is attempted.

3 Click [**OK**].

Configuring Job Accounting

Default Setting

Set the defaults for job accounting. To configure the settings, select the item in Default Setting and select the setting item.

[**System Menu/Counter**] key > [▲] [▼] key > [**User/Job Account**] > [**OK**] key > [▲] [▼] key > [**Job Account.Set.**] > [**OK**] key > [▲] [▼] key > [**Default Setting**] > [**OK**] key

For details on each function, see the table below.

Item	Description
Apply Limit	This specifies how the machine behaves when the counter has reached the limit of restriction. The table below describes the action taken. **Value** **Immediately: Job stops when the counter reaches its limit. The next job will be prohibited in sending or in storing in the box.** **Subsequently: Printing/scanning of the job continues but the subsequent job will be rejected.** **Alert Only: Job continues while displaying an alert message.**
Copy/Print Count	You can select how the copying and printing page counts are shown - either the total of both or each of copying and printing individually (Split). The selection may influence restriction on the count and count method. **Value: Total, Individual** ➡ Restricting the Use of the Machine (page 9-28) Print Accounting Report (page 9-37)
Counter Limit	When you add a new account, you can change the default restrictions on the number of sheets used. You can set any number from 1 to 9,999,999. The items that can be set differ depending on whether [**Individual**] or [**Total**] is selected for [**Copy/Print Count**]. ➡ Copy/Print Count (page 9-35)
[Split] selected for Copy/Printer Count	
Copy Restriction	Sets the default restriction on the number of sheets used for copying.
Print Restrict.	Sets the default restriction on the number of sheets used for printing.
ScanRest.(Other)	Sets the default restriction on the number of sheets used for scanning (excludes copying).
FAX Restriction*1	Sets the default restriction on the number of sheets used for sending faxes.
[Total] selected for Copy/Printer Count	
Print Restrict.	Sets the default restriction on the total number of sheets used for copying and printing.
ScanRest.(Other)	Sets the default restriction on the number of sheets used for scanning (excludes copying).
FAX Restriction*1	Sets the default restriction on the number of sheets used for sending faxes.

*1 Only on products with the fax function installed.

Counting the Number of Pages Printed

Counts are classified into Total Job Accounting and Each Job Accounting. A new count can also be started after resetting the count data which was stored for a certain period of time.

[**System Menu/Counter**] key > [▲] [▼] key > [**User/Job Account**] > [**OK**] key > [▲] [▼] key > [**Job Account.Set.**] > [**OK**] key > [▲] [▼] key > [**Total Accounting**] or [**Each Job Account**] > [**OK**] key

Total Accounting

This counts the number of pages for all accounts and resets the counts for those accounts together at the same time.

Each Job Account

This counts the number of pages for each account and resets the counts by account. When checking Each Job Accounting, select the account for which you want to check the count.

Types of the counts are as follows.

Item		Descriptions
Printed Pages		Displays the number of pages copied and printed, and the total number of pages used. You can also use [**FAX RX Pages**]*1, [**Duplex Pages**] and [**Combine Pages**] to check the number of pages used.
	Copy/Print Pages	Displays the number of pages copied and printed, and the total number of pages used. Select the [►] key to view the next screen. Select the [◄] key to return to the previous screen.
	FAX RX Pages	Displays the number of pages received.
	Total PrintPages	Displays the total number of pages used for copying and printing.
	Duplex Pages	Displays the number of pages printed in [**1-Sided**] mode, [**2-Sided**] mode, and the total pages in both modes. Select the [►] key to view the next screen. Select the [◄] key to return to the previous screen.
	Combine Pages	Displays the number of pages printed in [**None**] (no Combine) mode, [**2 in 1**] mode, [**4 in 1**] mode, and the total pages in both modes. Select the [►] key to view the next screen. Select the [◄] key to return to the previous screen.
Scanned Pages		Displays the number of pages scanned for copying, faxing and other functions, as well as the total number of pages scanned. Select the [►] key to view the next screen. Select the [◄] key to return to the previous screen.
FAX TX Pages*1		Displays the number of pages faxed.
FAX TX Time*1		Displays the total duration of FAX transmissions.
Counter Reset		Resets the counter. Select [**Yes**] in the confirmation screen.

*1 Only on products with the fax function installed.

To check other items, select the [**OK**] key to return to the screen one level higher.

Print Accounting Report

The total pages counted of all relevant accounts can be printed as an accounting report.

Reports have different formats depending on how the count of copiers and printers is administered.

When "Individual" is selected for Managing the Copy/Printer Count.

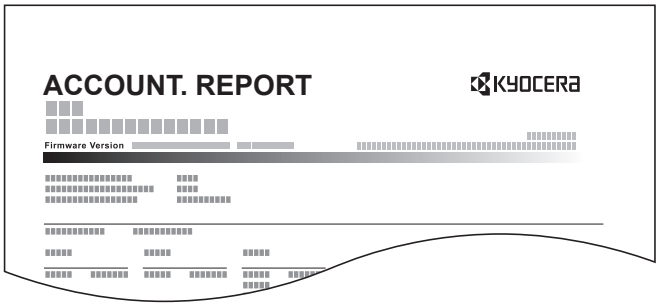

1 Prepare paper.

Check that A4 or Letter paper is loaded in the cassette.

2 Display the screen.

1 [**System Menu/Counter**] key > [▲] [▼] key > [**User/Job Account**] > [**OK**] key

NOTE

If the login user name entry screen appears during operations, enter a login user name and password, and select [**Login**]. For this, you need to login with administrator privileges.

The factory default login user name and login password are set as shown below.

Model Name	Login User Name	Login Password
ECOSYS M2235dn/ECOSYS M2735dn	3500	3500

2 [▲] [▼] key > [**Job Account.Set.**] > [**OK**] key

3 Print the report.

[▲] [▼] key > [**Account. Report**] > [**OK**] key > [**Yes**]

Accounting report is printed.

Using Job Accounting

This section explains procedures while setting job accounting.

Login/Logout

If job accounting is enabled, an account ID entry screen appears each time you use this machine.

Login

When the screen for entry of account codes on the machine appears, perform the following.

1 Enter the account ID using the numeric keys > [OK] key

NOTE

- If you entered a wrong character, select the [**Clear**] key and enter the account ID again.
- If the entered account ID does not match the registered ID, a warning beep will sound and login will fail. Enter the correct account ID.
- By selecting [**Counter**], you can refer to the number of pages printed and the number of pages scanned.

When the screen to enter the login user name and password appears

If user login administration is enabled, the screen to enter the login user name and password appears. Enter a login user name and password to login. If the user has already registered the account information, the account ID entry would be skipped.

Adding a User (Local User List) (page 9-6)

2 Proceed to complete the rest of the steps.

Logout

When the operations are complete, select the [**Authentication/Logout**] key to return to the account ID entry screen.

Unknown User Settings

Unknown ID Job

This specifies the behavior for handling the jobs sent with unknown or unsent login user names or User ID. If the User Login is set to invalid and Job Accounting is set to valid, follow the procedure when the Account ID is unknown.

The setting items are as follows.

Item	Descriptions
Permit	The job is permitted to be printed.
Reject	The job is rejected (not printed).

1 Display the screen.

1 [**System Menu/Counter**] key > [▲] [▼] key > [**User/Job Account**] > [**OK**] key

NOTE

If the login user name entry screen appears during operations, enter a login user name and password, and select [**Login**]. For this, you need to login with administrator privileges.

The factory default login user name and login password are set as shown below.

Model Name	Login User Name	Login Password
ECOSYS M2235dn/ECOSYS M2735dn	3500	3500

2 [▲] [▼] key > [**Unknown User**] key > [**OK**] key

2 Configure the settings.

[▲] [▼] key > [**Unknown ID Job**] > [**OK**] key > [▲] [▼] key > [**Reject**] or [**Permit**] > [**OK**] key

Registering Information for a User whose ID is Unknown

If you register user information for a user whose ID is unknown, you can check information on the Job Status or Job History screens. In addition, you can restrict available functions.

NOTE

This functions appears when [**Unknown ID Job**] is set to [**Permit**].

Unknown ID Job (page 9-39)

1 Display the screen.

1 [**System Menu/Counter**] key > [▲] [▼] key > [**User/Job Account**] > [**OK**] key

NOTE

If the login user name entry screen appears during operations, enter a login user name and password, and select [**Login**]. For this, you need to login with administrator privileges.

The factory default login user name and login password are set as shown below.

Model Name	Login User Name	Login Password
ECOSYS M2235dn/ECOSYS M2735dn	3500	3500

2 [▲] [▼] key > [**Unknown User**] > [**OK**] key > [▲] [▼] key > [**User Property**] > [**OK**] key

2 Enter the user information.

The table below explains the user information to be registered.

Item	Descriptions
User Name	Enter the name displayed on the user list (up to 32 characters). **NOTE** This is displayed when user login administration is enabled.
Account Name	Add an account where the user belongs. Overview of Job Accounting (page 9-23) **NOTE** This is displayed when job accounting is enabled.
Auth. Rules	Set usage authority. The following restriction items are available: **Print Restriction:** Select whether or not use of the print function of the printer is prohibited.

10 Troubleshooting

This chapter explains the following topics:

Regular Maintenance 10-2
Cleaning 10-2
Cleaning Glass Platen 10-2
Cleaning Slit Grass 10-3
Cleaning the inside of the Machine 10-4
Toner Container Replacement 10-7
Loading Paper 10-10
Using the Maintenance Menu 10-11
Troubleshooting 10-12
Solving Malfunctions 10-12
Machine Operation Trouble 10-12
Printed Image Trouble 10-15
Responding to Messages 10-18
Clearing Paper Jams 10-30
Jam Location Indicators 10-30
Remove any jammed paper in Cassette 1 10-31
Remove any jammed paper in Cassette 2 10-33
Remove any jammed paper in Cassette 3 10-35
Remove any jammed paper in the Multipurpose Tray 10-37
Remove any jammed paper inside of the Machine 10-38
Remove any jammed paper in Rear Cover 10-42
Remove any jammed paper in the Document Processor 10-46

Regular Maintenance

Cleaning

Clean the machine regularly to ensure optimum printing quality.

CAUTION

For safety, always unplug the power cord before cleaning the machine.

Cleaning Glass Platen

Wipe the inside of the document processor and the glass platen with a soft cloth dampened with alcohol or mild detergent.

IMPORTANT

Do not use thinner or other organic solvents.

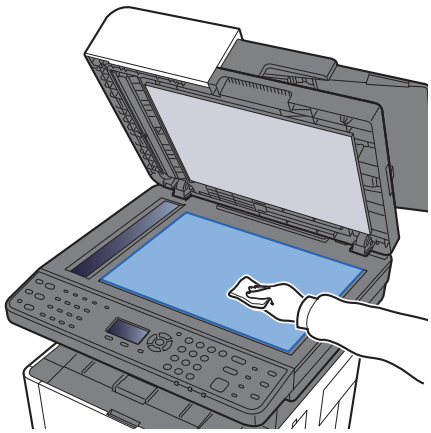

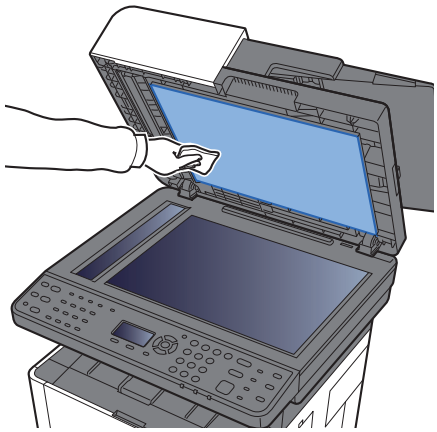

Cleaning Slit Grass

When using the document processor, clean the slit glass surface and the reading guide with the soft cloth.

NOTE

Dirt on the slit glass or the reading guide may cause black streaks to appear in the output.

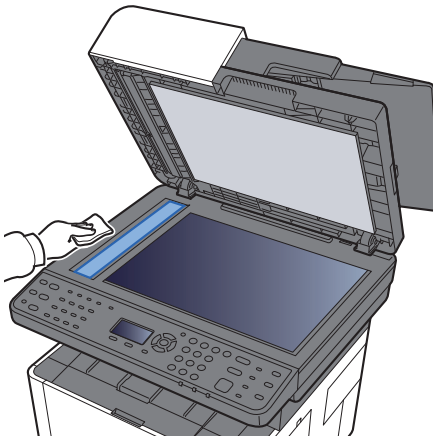

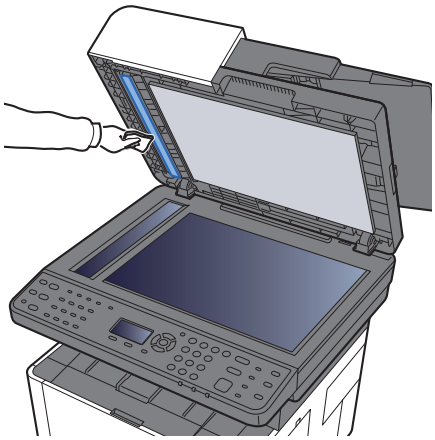

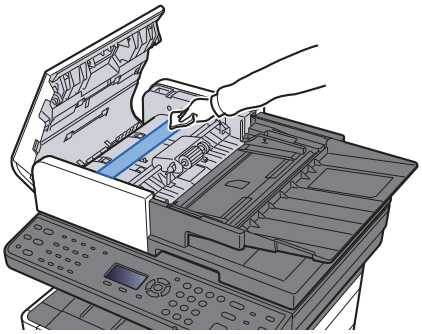

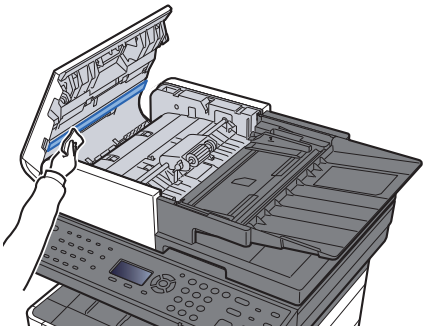

Cleaning the inside of the Machine

To maintain optimum print quality, clean the interior of the machine each time you replace the toner container, and whenever vertical lines appear.

1 Open the front cover.

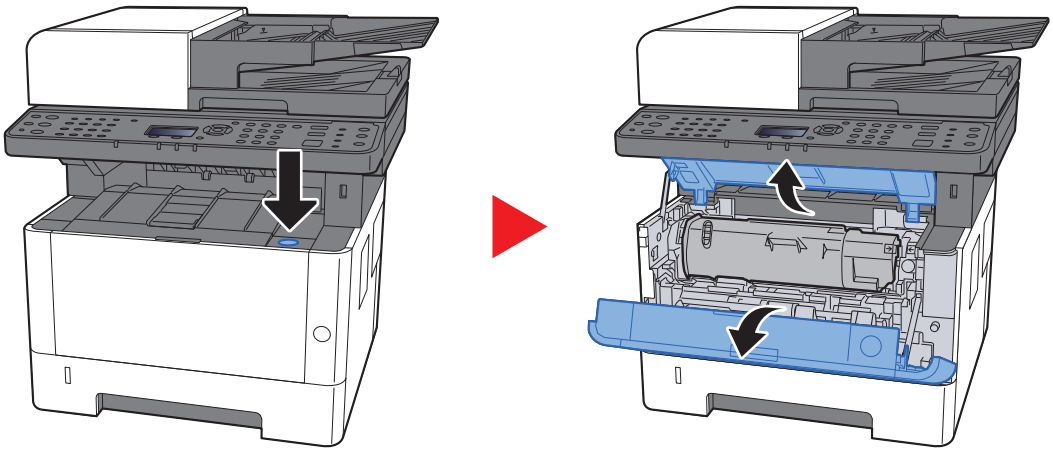

2 Lift the developer unit together with the toner container out of the machine.

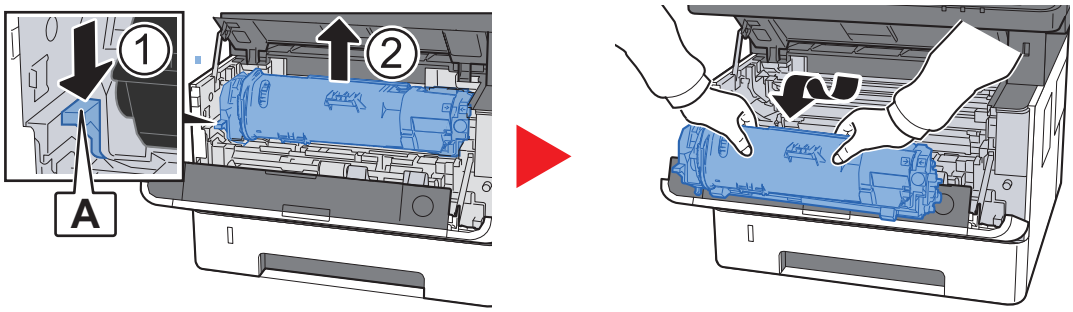

IMPORTANT

Do not touch the developer unit or subject the developer unit to shock. Print quality will be degraded.

3 Place the developer unit together with the toner container flat on a clean, level surface.

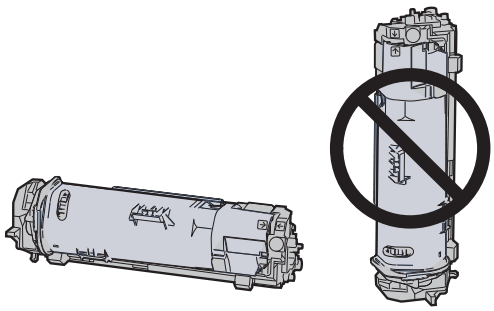

IMPORTANT

Do not place the developer unit together with the toner container on end.

4 Remove the drum unit from the machine.

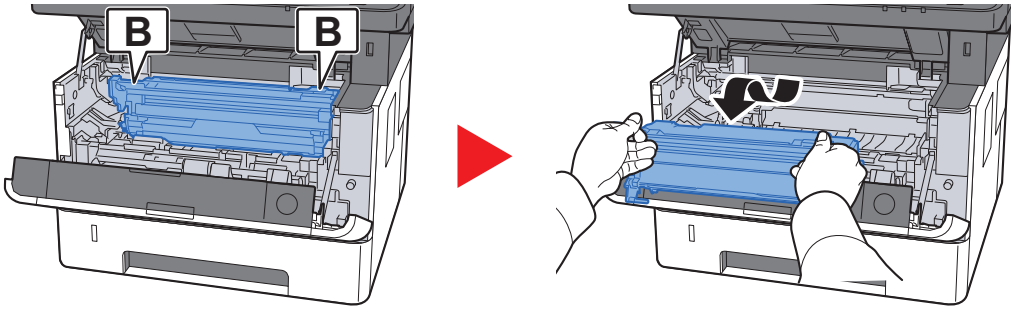

IMPORTANT

Do not touch the drum or subject the drum to shock. Print quality will be degraded if the drum is exposed to direct sunlight or intense light.

5 Place the drum unit flat on a clean, level surface.

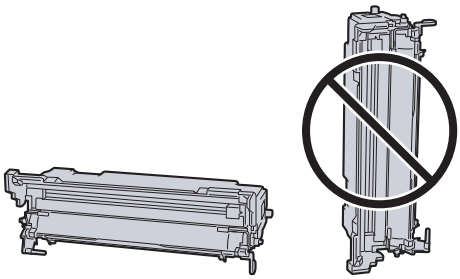

IMPORTANT

Do not place the drum unit on end.

6 Use a clean, lint free cloth to clean dust and dirt away from the metal registration roller.

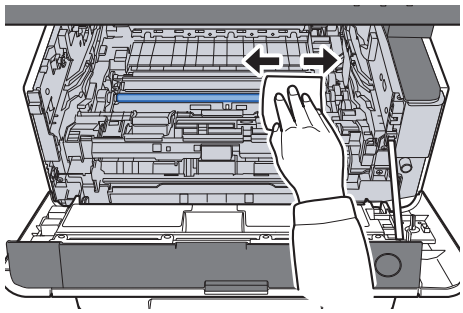

7 **On the drum unit, slide the main charger cleaner back and forth 2 or 3 times to clean the charger wire.**

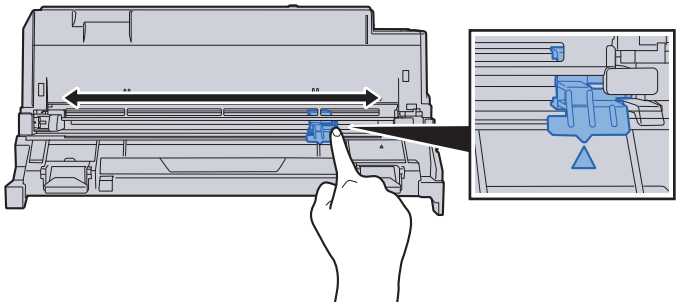

IMPORTANT

- **Before using the charger cleaner for the first time, remove the tape that holds the charger cleaner knob.**
- **After cleaning, make sure you restore the main charger cleaner to its home position (CLEANER HOME POSITION).**

8 **When cleaning is complete, return the drum unit to the original position.**

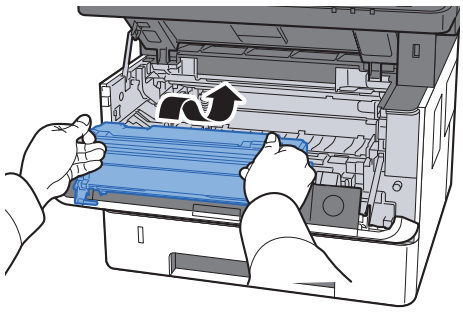

9 **Return the developer unit together with the toner container to its position, aligning the guides at both ends with the slots in the machine.**

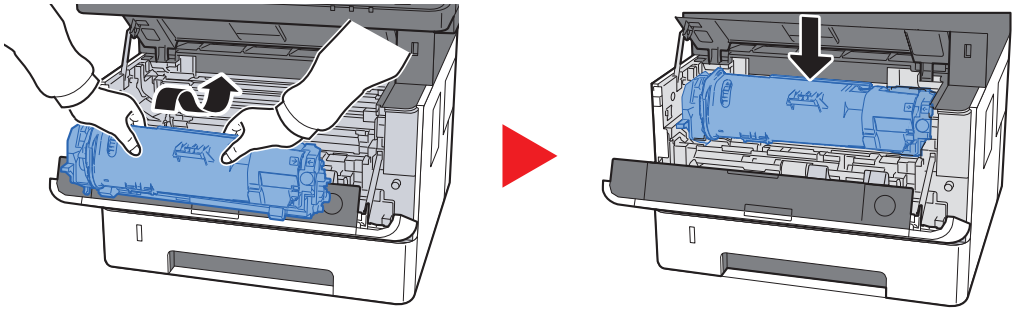

10 **Close the front cover.**

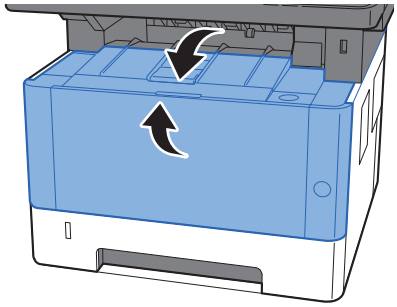

Toner Container Replacement

When toner is empty, the following message will be displayed.

"Replace toner."

When toner runs low, the following message will be displayed. Make sure you have a new toner container available for replacement.

"Toner is low. (Replace when empty.)"

Frequency of Toner Container Replacement

The life of the toner containers depends on the amount of toner required to accomplish your printing jobs. According to ISO/IEC 19752 and EcoPrint switched off the toner container can print as follows (A4/Letter paper is assumed):

TK-1200

Life of the Toner Container (Printable pages)
3,000 images

NOTE

- The average number of images that can be printed with the toner containers provided with the machine is 1,000 images
- To maintain quality, we recommend using genuine Kyocera toner containers, which must pass numerous quality inspections.

CAUTION

Do not attempt to incinerate parts which contain toner. Dangerous sparks may cause burns.

Replacing the Toner Container

1 Open the front cover.

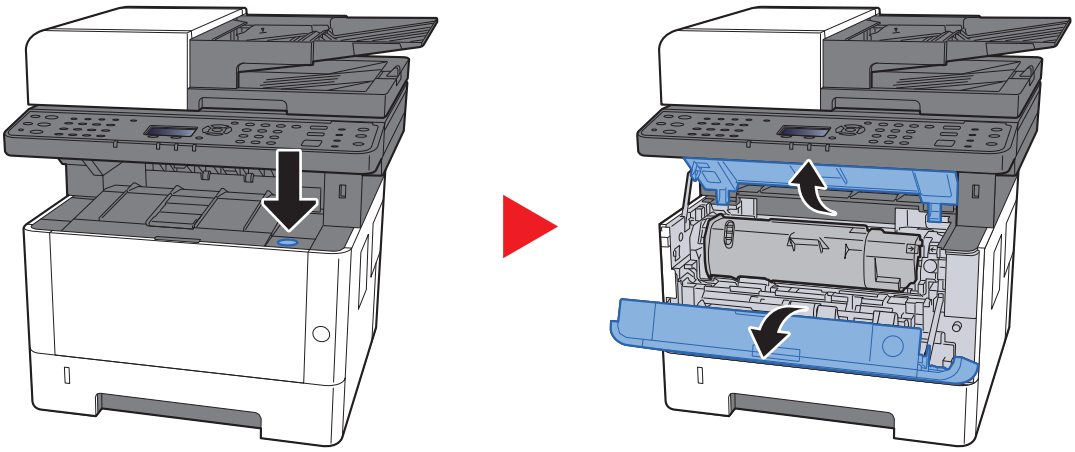

2 Unlock the toner container.

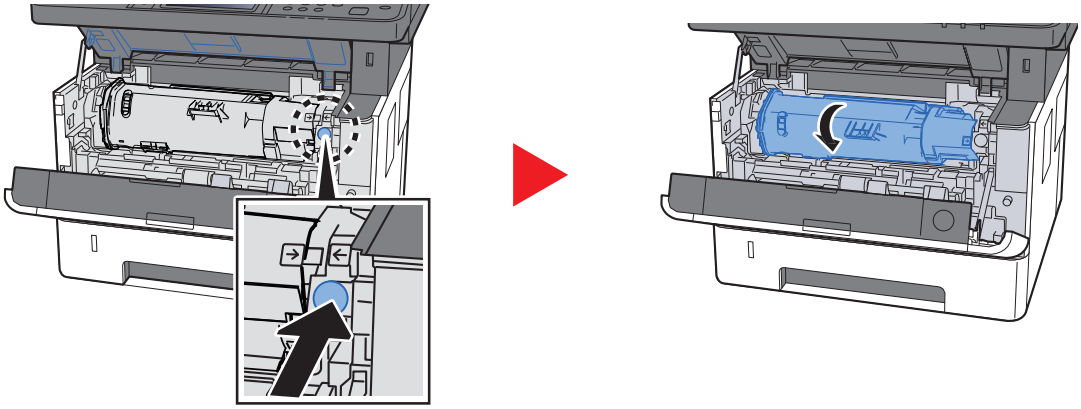

3 Remove the toner container.

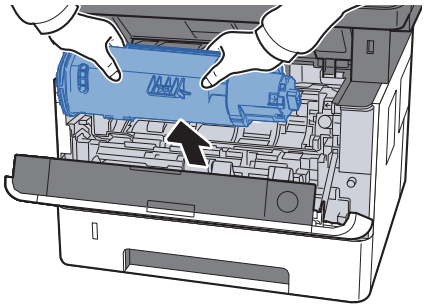

4 Put used toner containers into the plastic waste bag.

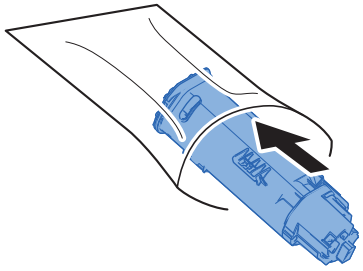

5 Remove the new toner container from the box.

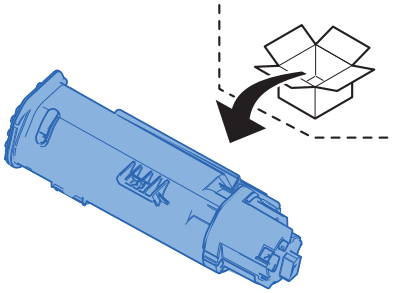

IMPORTANT

Do not touch the points shown below.

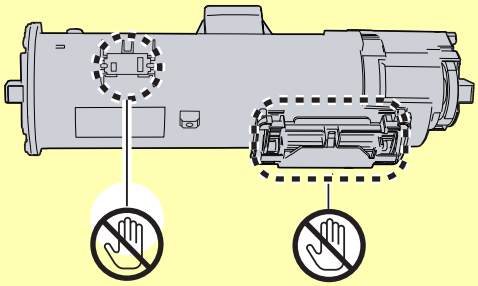

6 Shake the toner container.

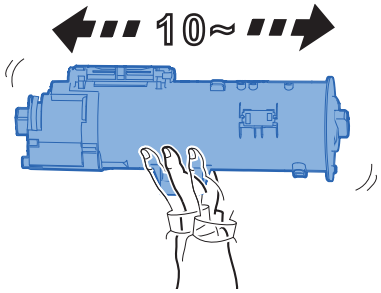

7 Install the toner container.

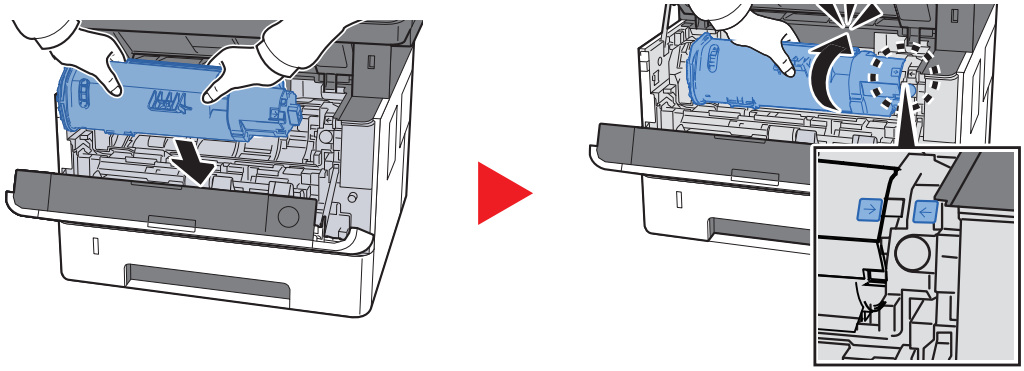

8 Close the front cover.

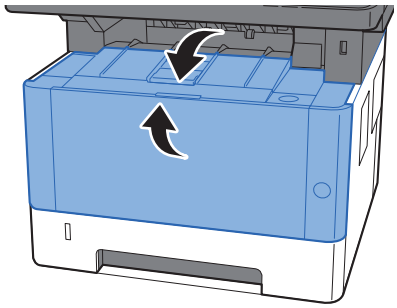

NOTE

- If the front cover does not close, check that the new toner container is installed correctly.
- Return the exhausted toner container to your dealer or service representative. The collected toner container will be recycled or disposed in accordance with the relevant regulations.

Loading Paper

When Cassette # runs out of paper, the following messages will be displayed.

"Load paper in cassette #." (# is a cassette number)

"Load paper in MP tray."

Loading Paper (page 3-2)

Loading Paper in the Multipurpose Tray (page 5-5)

NOTE

If [**Paper Setup Msg**] is set to [**On**], the confirmation screen for the paper setting will be displayed when a new paper is set. If a paper is changed, select [**Change**] and then change the settings of the paper.

Cassette 1 to 3 (page 8-18)

MP Tray (page 8-18)

Using the Maintenance Menu

You can use the [**Maintenance Menu**] to adjust the print position and scan position, and maximize the print quality for the elevation of your location.

Maintenance Menu User Guide

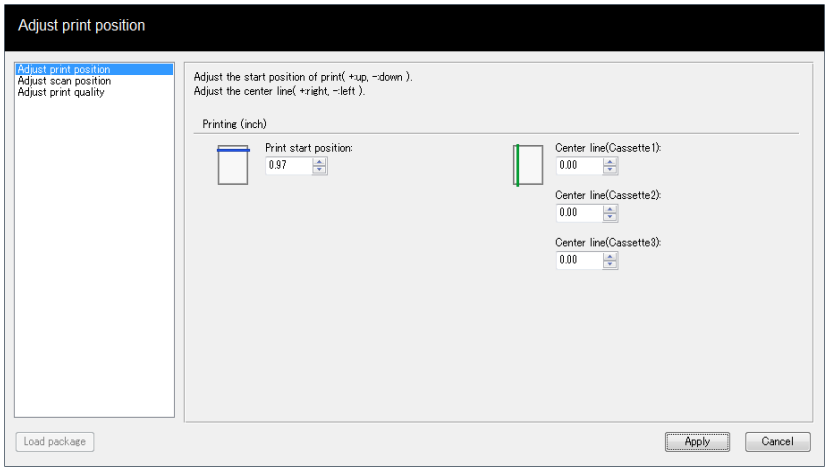

Item			Description
Adjust print position	**Printing start position**		Enter or select the top margin start position for printing. **Value: 0 to 300 mm (in 5 mm increments)**
	Center Line		Enter or select the left margin start position for printing for each available paper source. This setting is available for each cassette when optional paper feeders are installed. **Value: -25 to 25 mm (in 5 mm increments)**
Adjust scan position	**Platen**	**Scanning start position**	Enter or select the top margin scan start position for the platen. **Value: -45 to 45 mm (in 5 mm increments)**
		Center Line	Enter or select the left margin scan start position for the platen. **Value: -50 to 50 mm (in 5 mm increments)**
	Document Processor	**Scanning start position**	With a document processor installed, enter or select the top margin scan start positions for front and back. **Value: -25 to 25 mm (in 5 mm increments)**
		Scan end position	With a document processor installed, enter or select the bottom margin scan end positions for front and back. **Value: -25 to 25 mm (in 5 mm increments)**
		Center Line	With a document processor installed, enter or select the left margin scan start positions for front and back. **Value: -50 to 50 mm (in 5 mm increments)**
Adjust print quality	**Drum charge setting**		When print quality has deteriorated, the output of the main charger can be changed to restore print quality. **Value: 1 to 7**
	Altitude setting		If you are using the machine at an altitude of 1,000 m or higher and print quality has deteriorated, the Altitude setting can be used to restore print quality. **Value: Normal, 1001 - 2000m, 2001 - 3000m, 3001 - 3500m**
	Drum refresh		Perform Drum refresh when images show streaking with white lines.

Troubleshooting

Solving Malfunctions

The table below provides general guidelines for problem solving.

If a problem occurs with your machine, look into the checkpoints and perform procedures indicated on the following pages. If the problem persists, contact your Service Representative.

NOTE

When contacting us, the serial number will be necessary.
To check the serial number, refer to the following:

Checking the Equipment's Serial Number (page i)

Machine Operation Trouble

When the following machine operation troubles occur, implement appropriate procedures.

Symptom	Checkpoints	Corrective Actions	Reference Page
The screen does not respond when the power switch is turned on.	Check the power cord.	Connect both ends of the power cord securely.	page 2-9
Pressing the [**Start**] key does not produce copies.	Is there a message on the screen?	Determine the appropriate response to the message and respond accordingly.	page 10-18
	Is the machine in Sleep mode?	Select the [**Energy Saver**] key.	page 2-20
Blank sheets are ejected. 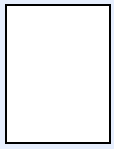	Are the originals loaded correctly?	When placing originals on the platen, place them face-down and align them with the original size indicator plates.	page 5-2
		When placing originals in the document processor, place them face-up.	page 5-3
	—	Check that the settings of the application software.	—
Paper often jams.	Is the paper loaded correctly?	Load the paper correctly.	page 3-4
	—	Turn the orientation 180 degrees around in which the paper is positioned.	page 3-4
	Is the paper of the supported type? Is it in good condition?	Remove the paper, turn it over, and reload it.	page 3-4
	Is the paper curled, folded or wrinkled?	Replace the paper with new paper.	page 3-4
	Are there any loose scraps or jammed paper in the machine?	Remove any jammed paper.	page 10-30
2 or more sheets are overlaps when ejected. (multi feed) 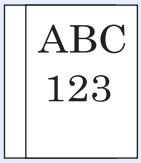	—	Load the paper correctly.	page 3-2

Symptom	Checkpoints	Corrective Actions	Reference Page
Printouts are wrinkled. 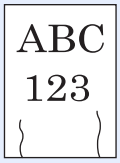	Is the paper loaded correctly?	Load the paper correctly.	page 3-2
	—	Turn the orientation 180 degrees around in which the paper is positioned.	page 3-2
	Is the paper damp?	Replace the paper with new paper.	page 3-2
Printouts are curled. 	—	Turn the paper over in the cassette, or turn the orientation 180 degrees around in which the paper is positioned.	page 3-2
	Is the paper damp?	Replace the paper with new paper.	page 3-2
Cannot print.	Is the machine plugged in?	Plug the power cord into an AC outlet.	—
	Is the machine powered on?	Turn on the power switch.	page 2-10
	Are the USB cable and network cable connected?	Connect the correct USB cable and network cable securely.	page 2-8
	Is the print job paused?	Resume printing.	page 7-13
Cannot print with USB memory.	Is the USB host blocked?	Select [**Unblock**] in the USB host settings.	page 8-12
USB memory not recognized.	—	Check that the USB memory is securely plugged into the machine.	—
While "Auto-IP" is set to [**On**], the IP address is not assigned automatically.	Is a value other than "0.0.0.0" entered for the IP address of TCP/IP(v4)?	Enter "0.0.0.0" for the IP address of TCP/IP(v4).	page 2-18

Symptom	Checkpoints	Corrective Actions	Reference Page
Cannot send via SMB.	Is the network cable connected?	Connect the correct network cable securely.	page 2-8
	Have the network settings for the equipment been configured properly?	Configure the TCP/IP settings properly.	page 8-7
	Have the folder sharing settings been configured properly?	Check sharing settings and access privileges under the folder properties.	page 3-10
	Has the SMB protocol been set to [**On**]?	Set the SMB protocol setting to [**On**].	page 8-10
	Has [**Host Name**] been entered properly? *1	Check the name of the computer to which data is being sent.	page 5-16
	Has [**Path**] been entered properly?	Check the share name for the shared folder.	page 5-16
	Has [**Login User Name**] been entered properly? *1 *2	Check the domain name and login user name.	page 5-16
	Has the same domain name been used for [**Host Name**] and [**Login User Name**]?	Delete the domain name and backslash ("/") from [**Login User Name**].	page 5-16
	Has [**Login Password**] been entered properly?	Check the login password.	page 5-16
	Have exceptions for Windows Firewall been configured properly?	Configure exceptions for Windows Firewall properly.	page 3-13
	Do the time settings for the equipment, domain server, and data destination computer differ?	Set the equipment, domain server, and data destination computer to the same time.	—
	Is the screen displaying Send error?	Refer to Responding to Send Error.	page 10-27
Cannot send via the e-mail.	Is the E-mail send size limit set in the SMTP server registered on the machine?	Check the limit value is entered to "E-mail Size Limit" of [**E-mail**] setting in Command Center RX and change the value as necessary.	page 2-45
The machine is emitting steam in the area around the paper ejection slot.	Check the room temperature to see if it is low, or if damp paper was used.	Depending on the printing environment and the paper's condition, the heat generated during printing will cause the moisture in the paper to evaporate, and the steam emitted may look like smoke. This is not a problem, and you can continue printing. If the steam concerns you, raise the room temperature, or replace the paper with a newer, dryer paper.	—

*1 You can also enter a full computer name as the host name (for example, pc001.abcdnet.com).
*2 You can also enter login user names in the following formats:
Domain_name/user_name (for example, abcdnet/james.smith)
User_name@domain_name (for example, james.smith@abcdnet)

Printed Image Trouble

When the following printed image trouble occurs, implement appropriate procedures.

Symptom	Checkpoints	Corrective Actions	Reference Page
Printed images are totally too light. 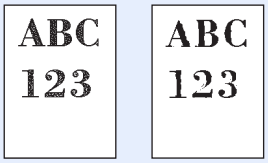 	Is the paper damp?	Replace the paper with new paper.	page 3-2
	Have you changed the density?	Select appropriate density level.	page 6-17 page 8-34
	Is the toner distributed evenly within the toner container?	Shake the toner container from side to side several times.	page 10-7
	Is EcoPrint mode enabled?	Disable [**EcoPrint**] mode.	page 8-29
	Are the drum unit and developer unit installed correctly?	Correctly install the drum unit and developer unit.	page 10-4
	—	Make sure the paper type setting is correct for the paper being used.	page 8-17
	—	Select the [**System Menu/Counter**] key > [**Adjust/Maint.**] > [**Service Setting**] > [**Drum Refresh**], and then select [**Yes**].	—
Printed images are too dark even though the background of the scanned original is white.  	Have you changed the density?	Select appropriate density level.	page 6-17 page 8-34
	—	Select the [**System Menu/Counter**] key > [**Adjust/Maint.**] > [**Service Setting**] > [**Drum Refresh**], and then select [**Yes**].	—
	—	Select the [**System Menu/Counter**] key > [**Adjust/Maint.**] > [**Service Setting**] > [**MC**] and increase the adjustment value. Increase the adjustment value 1 level at a time from the current value. If there is no improvement after the value is increased by 1 level, increase by 1 level again. If there is no improvement, lower in increments of 1 level from the original setting. If there is no improvement after the value is decreased by 1 level, decrease by 1 level again. If there is still no improvement, return the setting to the original value.	—
Copies have a moire pattern (dots grouped together in patterns and not aligned uniformly). 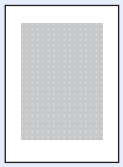	Is the original a printed photograph?	**When making copies** Set the original image to [**Photo**].	page 6-16
	—	**When making copies** Set [**Sharpness**] to a value from [**-1**] to [**-3**].	page 6-19
	—	**When making copies** Select the [**System Menu/Counter**] key > [**Copy**] > [**DP Read Action**], and set to [**Quality Priority**].	page 8-28
Texts are not clearly printed.  	Did you choose appropriate image quality for the original?	Select appropriate image quality.	page 6-16
	—	**When making copies** Set [**Sharpness**] to a value from [**+1**] to [**+3**].	page 6-19

Symptom	Checkpoints	Corrective Actions	Reference Page
Black points appear in white background parts of the image. 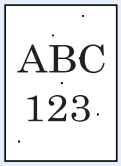	Is the original holder or the glass platen dirty?	Clean the original holder or the glass platen.	page 10-2
	—	Select the [**System Menu/Counter**] key > [**Adjust/Maint.**] > [**Service Setting**] > [**Drum Refresh**], and then select [**Yes**].	—
	—	Select the [**System Menu/Counter**] key > [**Adjust/Maint.**] > [**Service Setting**] > [**MC**] and increase the adjustment value. Increase the adjustment value 1 level at a time from the current value. If there is no improvement after the value is increased by 1 level, increase by 1 level again. If there is still no improvement, return the setting to the original value.	—
Printed images are fuzzy. 	Is the machine being used in conditions of very humid, or humidity or temperature rapidly changes?	Use in an environment that has suitable humidity.	—
	—	Select the [**System Menu/Counter**] key > [**Adjust/Maint.**] > [**Service Setting**] > [**Drum Refresh**], and then select [**Yes**].	—
Printed images are skewed. 	Are the originals placed correctly?	When placing originals on the platen, align them with the original size indicator plates.	page 5-2
		When placing originals in the document processor, align the original width guides securely before placing the originals.	page 5-3
	Is the paper loaded correctly?	Check the position of the paper width guides.	page 3-2
Irregular horizontal lines appear in the image. 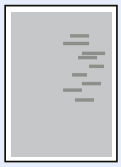	—	Select the [**System Menu/Counter**] key > [**Adjustment/Maintenance**] > [**Service Setting**] > [**MC**] and increase the adjustment value. Increase the adjustment value 1 level at a time from the current value. If there is no improvement after the value is increased by 1 level, increase by 1 level again. If there is still no improvement, return the setting to the original value.	—
The altitude is 1000 m or higher and irregular horizontal white lines appear in the image. 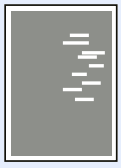	—	Select the [**System Menu/Counter**] key > [**Adjustment/Maintenance**] > [**Service Setting**] > [**Altitude Adjustment**], and set to an elevation one level higher than the current setting.	—

Symptom	Checkpoints	Corrective Actions	Reference Page
The altitude is 1000 m or higher and dots appear in the image. 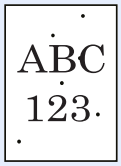	—	Select the [**System Menu/Counter**] key > [**Adjustment/Maintenance**] > [**Service Setting**] > [**Altitude Adjustment**], and set to an elevation one level higher than the current setting.	—
Printouts have vertical lines. 	Is the slit glass dirty?	Clean the slit glass.	page 10-3
	—	Clean the charger inside of the machine.	page 10-4
Dirt on the top edge or back of the paper. 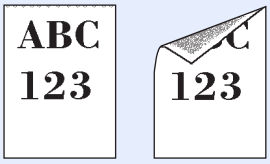	Is the interior of the machine dirty?	Clean the interior of the machine.	page 10-4
Part of the image is periodically faint or shows white lines. 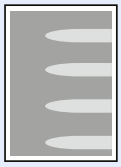	—	Open and then close the front cover.	—
	—	Select the [**System Menu/Counter**] key > [**Adjust/Maint.**] > [**Service Setting**] > [**Drum Refresh**], and then select [**Yes**].	—
	—	Select the [**System Menu/Counter**] key > [**Adjust/Maint.**] > [**Service Setting**] > [**MC**] and decrease the adjustment value. Decrease the adjustment value 1 level at a time from the current value. If there is no improvement after the value is decreased by 1 level, decrease by 1 level again. If there is still no improvement, return the setting to the original value.	—
The previous image remains and lightly printed. 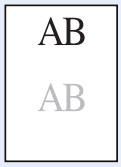	—	Make sure the paper type setting is correct for the paper being used.	page 8-16
	—	Select the [**System Menu/Counter**] key > [**Adjustment/Maintenance**] > [**Service Setting**] > [**MC**] and increase the adjustment value. Increase the adjustment value 1 level at a time from the current value. If there is no improvement after the value is increased by 1 level, increase by 1 level again. If there is still no improvement, return the setting to the original value.	—

Responding to Messages

If the message display or the computer displays any of these messages, follow the corresponding procedure.

NOTE

When contacting us, the serial number will be necessary.
To check the serial number, refer to the following:

Checking the Equipment's Serial Number (page i)

A

Message	Checkpoints	Corrective Actions	Reference Page
Access point was not detected.	—	Check if the access point has been set correctly.	—
Account error.	—	Failed to specify Job Accounting when processing the job externally. The job is canceled. Select the [**OK**] key.	—

C

Message	Checkpoints	Corrective Actions	Reference Page
Cannot connect to Authentication Server **Check the connection with the server.**	—	Check the connection status with the server.	—
Cannot connect to Authentication Server **Check the domain name.**	—	Check the domain name.	page 9-2
Cannot connect to Authentication Server **Check the host name.**	—	Check the host name.	page 9-2
Cannot connect to Authentication Server **Set machine time to match server's time.**	—	Set machine time to match the server’s time.	page 2-17
Cannot connect to Server. Check the Connection Status. **Job is canceled.**	—	Check the connection status with the server.	—
Cannot duplex print on this paper. **↑↓ (Displayed alternately)** **Press OK to continue using cassette #.**	Did you select a paper size/type that cannot be duplex printed?	Select [**Paper**] to select the available paper. Select [**OK**] to print without using Duplex function.	—

Message	Checkpoints	Corrective Actions	Reference Page
Cannot duplex print on this paper. **↑↓ (Displayed alternately)** **Press OK to using MP Tray.**	Did you select a paper size/type that cannot be duplex printed?	Select [**Paper**] to select the available paper. Select the [**OK**] key to print without using Duplex function.	—
Cannot read data in this ID Card.	—	In registration process, the ID card information was not read correctly. Hold again the ID card over the ID card reading part. If the same message still appears, the ID card may not be compatible with this product. Change it to another ID card.	—
Cannot recognize.	—	Make sure your ID card has been registered.	**Card Authentication Kit (B) Operation Guide**
Cannot use this function. **>> #####**	—	This job is canceled because it is restricted by User Authorization or Job Accounting. Select the [**OK**] key.	—
Close # cover.	Is there any cover which is open?	Close the cover indicated on the screen.	—
Close the document processor and its cover.	Is the document processor open?	Close the document processor.	—
Cooling… **Please wait.**	—	The machine is under the adjustment to maintain its quality. Please wait.	—

E

Message	Checkpoints	Corrective Actions	Reference Page
Error occurred. Turn the power switch off and on.	—	System error has occurred. Turn the power switch OFF and then ON.	—

F

Message	Checkpoints	Corrective Actions	Reference Page
Failed to store job retention data. Job is canceled.	—	The job is canceled. Select the [**OK**] key.	—
FAX memory is full.	—	FAX cannot be performed any more due to insufficient memory. The job is canceled. Select the [**OK**] key.	**FAX Operation Guide**

H

Message	Checkpoints	Corrective Actions	Reference Page
High temperature. Adjust room temp.	—	Adjust the temperature and the humidity of your room.	—

I

Message	Checkpoints	Corrective Actions	Reference Page
Incorrect account ID. Job is canceled.*1	—	The account ID was incorrect when processing the job externally. The job is canceled. Select the [**OK**] key.	—
Incorrect Login User Name or Password. Job is canceled.*1	—	The login user name or password was incorrect when processing the job externally. The job is canceled. Select the [**OK**] key.	—
Inner tray is full of paper. Remove the paper.	—	Remove paper from the inner tray. Select [**Continue**] to resume printing. Select [**Cancel**] to cancel the job.	—
Insufficient memory. Cannot start the job.	—	Job cannot be started. Try again later.	—

*1 When Auto Error Clear is set to [**On**], processing resumes automatically after a set amount of time elapses. For details on Auto Error Clear, refer to the following:

➡ Auto Err. Clear (page 8-23)

J

Message	Checkpoints	Corrective Actions	Reference Page
Job Accounting restriction exceeded. Job is canceled.	Is the acceptable printing count restricted by Job Accounting exceeded?	The printing count exceeded the acceptable count restricted by Job Accounting. Cannot print any more. This job is canceled. Select the [**OK**] key.	—

K

Message	Checkpoints	Corrective Actions	Reference Page
KPDL error. Job is canceled.*1	—	PostScript error has occurred. The job is canceled. Select the [**OK**] key.	—

*1 When Auto Error Clear is set to [**On**], processing resumes automatically after a set amount of time elapses. For details on Auto Error Clear, refer to the following:

➡ Auto Err. Clear (page 8-23)

L

Message	Checkpoints	Corrective Actions	Reference Page
Load paper in cassette #. **↑↓ (Displayed alternately)** **Press OK to continue using cassette #.**	Is the indicated cassette out of paper?	Load paper. Select [**Paper**] to select the other paper source. Select the [**OK**] key to print on the paper in the currently selected paper source.	page 3-2
Load paper in cassette #. **↑↓ (Displayed alternately)** **Set selected size paper and press [OK].**	Is the indicated cassette out of paper?	Load paper. Select [**Paper**] to select the other paper source. Select the [**OK**] key to print on the paper in the currently selected paper source.	page 3-2
Load paper in MP tray. **↑↓ (Displayed alternately)** **Press OK to continue using MP tray.**	Is the paper of the selected size loaded in the multipurpose tray?	Load paper. Select [**Paper**] to select the other paper source. Select the [**OK**] key to print on the paper in the currently selected paper source.	page 3-2
Load paper in MP tray. **↑↓ (Displayed alternately)** **Set selected size paper and press [OK].**	Is the paper of the selected size loaded in the multipurpose tray?	Load paper. Select [**Paper**] to select the other paper source. Select the [**OK**] key to print on the paper in the currently selected paper source.	page 3-2
Low temperature. Adjust room temp.	—	Adjust the temperature and the humidity of your room.	—

M

Message	Checkpoints	Corrective Actions	Reference Page
Machine failure. Call service.	—	An error has occurred in the machine. Make a note of the error code displayed on the message display, and contact your service representative.	—
Maximum number of scanned pages. Job is canceled.	Is the acceptable scanning count exceeded?	Cannot scan pages any more. Job is canceled. Select the [**OK**] key.	—
Memory card error. **Job is canceled.**	—	An error has occurred on the memory card. Job is canceled. Select [**End**]. 04: Insufficient space on the memory card to complete this operation. Move data or delete unneeded data.	—

Message	Checkpoints	Corrective Actions	Reference Page
Memory is full. Job is canceled.	—	The process cannot be performed due to insufficient memory. If only [**End**] is available, select [**End**]. The job will be canceled.	—
Memory is full. **Print job cannot be processed completely.***1	—	Unable to continue the job as the memory is used up. Select [**Continue**] to print the scanned pages. The print job cannot be processed completely. Select [**Cancel**] to cancel the job. The machine may reproduce the same originals by arranging the following settings: • Select [**On**] of RAM Disk Mode in System Menu, and then decrease the RAM Disk Size. • Select [**Printer Priority**] of Optional Memory in System Menu. **NOTE** Before changing the RAM Disk Mode or Optional Memory setting, contact your administrator.	page 8-26

*1 When Auto Error Clear is set to [**On**], processing resumes automatically after a set amount of time elapses. For details on Auto Error Clear, refer to the following:

Auto Err. Clear (page 8-23)

N

Message	Checkpoints	Corrective Actions	Reference Page
Non-genuine Toner. Press [Help].	Is the installed toner container our own brand?	The manufacturer assumes no responsibility for damage caused by a non-genuine toner. We recommend that you only use genuine toner containers. When you want to use the toner container currently installed, select the [**OK**] key and the [**Stop**] key simultaneously for 3 seconds or more.	—

P

Message	Checkpoints	Corrective Actions	Reference Page
Paper jammed above Cassette 1.	—	If a paper jam occurs, the machine will stop and the location of the jam will be indicated on the screen. Leave the machine on and select [**Help**] on the screen, and follow the instruction to remove the jammed paper.	page 10-38

Message	Checkpoints	Corrective Actions	Reference Page
Paper jammed at MP tray. **Paper jammed in Cassette #.**	—	If a paper jam occurs, the machine will stop and the location of the jam will be indicated on the screen. Leave the machine on and follow the instruction to remove the jammed paper.	page 10-30
Paper jammed in document processor.	—	A paper jam has occurred in the document processor. Leave the machine on and select [**Help**] on the screen, and follow the instruction to remove the jammed paper.	page 10-46
Paper jammed in Rear cover.	—	If a paper jam occurs, the machine will stop and the location of the jam will be indicated on the screen. Leave the machine on and select [**Help**] on the screen, and follow the instruction to remove the jammed paper.	page 10-42
Polling box limit exceeded. Job is canceled.	Is [**OK**] displayed on the screen?	The specified box is full, and no further storage is available; Job is canceled. Select the [**OK**] key. Try to perform the job again after printing or deleting data from the box.	**FAX Operation Guide**
Print overrun. Job is paused.	—	The job was paused because print processing is taking a long time. Select [**Continue**] to restart the job. To cancel the job, select [**Cancel**].	—
Printing multiple copies is not allowed.	—	Only one copy is available. Select [**Continue**] to continue printing. Select [**Cancel**] to cancel the job.	—

R

Message	Checkpoints	Corrective Actions	Reference Page
RAM disk error. Press [OK].	—	An error has occurred on the RAM disk. Job is canceled. Select the [**OK**] key. The possible error codes and their descriptions are as follows. 04: Insufficient space on the RAM disk. If the optional RAM dis is installed, increase the RAM Disk Size by changing RAM Disk Mode in System Menu. **NOTE** The range of RAM disk size can be increased by selecting [**Printer Priority**] in Optional Memory.	page 8-26
Refreshing drum... **Please wait.**	—	The machine is under the adjustment to maintain its quality. Please wait.	—

Message	Checkpoints	Corrective Actions	Reference Page
Register with Google Cloud Print. Are you sure?	—	The message is displayed when this machine receives the register request for Google Cloud Print. Select the [**Yes**] key to register the printer as a Google Cloud Print device. Select the [**No**] key to cancel the registration.	—
Removable Memory is full. Job is canceled.[*1]	—	Job is canceled. Select [**End**]. Insufficient free space in the removable memory. Delete unneeded files.	—
Remove original from document processor.	Are there any originals left in the document processor?	Remove originals from the document processor.	page 10-46
Replace all originals and press Start key.	—	Remove originals from the document processor, put them back in their original order, and place them again. Select [**Cancel**] to cancel the job.	—
Replace MK.	—	Replacement of the parts in the maintenance kit is necessary at every 100,000 pages of printing and requires professional servicing. Contact your Service Representative.	—
Replace the toner.	—	Replace the toner container.	page 10-7
Restricted by Job Accounting. **Cannot print.**	—	This job is canceled because it is restricted by Job Accounting. Select the [**OK**] key.	—

*1 When Auto Error Clear is set to [**On**], processing resumes automatically after a set amount of time elapses. For details on Auto Error Clear, refer to the following:

➡ Auto Err. Clear (page 8-23)

S

Message	Checkpoints	Corrective Actions	Reference Page
Scanner memory is full. Job is canceled.	—	Scanning cannot be performed any more due to insufficient memory. The job is canceled. Select the [**OK**] key.	page 8-26
Scheduled sending jobs exceeded.	—	The number of jobs has exceeded the limit set for delayed transmission. Select the [**OK**] key.	—
Send Error.[*1]	—	An error has occurred during transmission. The job is canceled. Select the [**OK**] key. Refer to Responding to Send Error for the error code and corrective actions.	page 10-27

*1 When Auto Error Clear is set to [**On**], processing resumes automatically after a set amount of time elapses. For details on Auto Error Clear, refer to the following:

➡ Auto Err. Clear (page 8-23)

T

Message	Checkpoints	Corrective Actions	Reference Page
The device cannot be connected because allowed connections would be exceeded.	—	Release the connection of an unused mobile device, or set an auto break time on the machine to break connections to mobile devices.	—
The phone receiver is off the hook. Hang Up.	—	Put down the receiver.	**FAX Operation Guide**
The slit glass requires cleaning.	—	Clean the slit glass.	page 10-3
The toner container is improperly installed.	Are the toner container and developer unit installed correctly?	Correctly install the toner container and developer unit.	page 10-4
This ID Card is already registered.	—	Your ID card has already been registered. Change it to another ID card.	—
This user account is locked out. Contact administrator Job is canceled.	—	Contact administrator. The job is canceled. Select the [**OK**] key.	—
Toner is low. (Replace when empty.)	—	It is almost time to replace the toner container. Obtain a new toner container.	—

U

Message	Checkpoints	Corrective Actions	Reference Page
Unknown Toner Installed. PC	Does the installed toner container's regional specification match the machine's?	Install the specified toner container.	—

Message	Checkpoints	Corrective Actions	Reference Page
USB memory error. **Job is canceled.**	Is writing to a removable memory prohibited?	An error occurred in the removable memory. The job stopped. Select the [**OK**] key. The possible error codes and their descriptions are as follows. 01: Connect a removable memory that can be written to.	—
	—	An error occurred in the removable memory. The job stopped. Select [**OK**]. The possible error codes and their descriptions are as follows. 01: The amount of data that can be saved at once has been exceeded. Turn the power OFF/ON. If the error still occurs, the removable memory is not compatible with the machine. Use the removable memory formatted by this machine. If the removable memory cannot be formatted, it is damaged. Connect a compatible removable memory.	—

Responding to Send Error

Error Code	Message	Corrective Actions	Reference Page
1101	Failed to send the e-mail.	Check the host name of the SMTP server on the Command Center RX.	page 2-45
	Failed to send via FTP.	Check the host name of FTP.	page 5-18
	Failed to send via SMB.	Check the host name of SMB.	page 5-16
1102	Failed to send via SMB.	Check the SMB settings. • Login user name and login password **NOTE** If the sender is a domain user, specify the domain name. • Host name • Path	page 5-16
	Failed to send the e-mail.	Check the following on the Command Center RX. • SMTP login user name and login password • POP3 login user name and login password • E-mail size limit	page 2-45
	Failed to send via FTP.	Check the FTP settings. • Login user name and login password **NOTE** If the sender is a domain user, specify the domain name. • Path • Folder share permissions of the recipient	page 5-18
1103	Failed to send via SMB.	Check the SMB settings. • Login user name and login password **NOTE** If the sender is a domain user, specify the domain name. • Path • Folder share permissions of the recipient	page 5-16
	Failed to send via FTP.	Check the FTP settings. • Path • Folder share permissions of the recipient	page 5-18
1104	Failed to send the e-mail.	Check the e-mail address. **NOTE** If the address is rejected by the domain, you cannot send the email.	page 5-15

Error Code	Message	Corrective Actions	Reference Page
1105	Failed to send via SMB.	Select [**On**] of the SMB settings on the Command Center RX.	page 8-10
	Failed to send the e-mail.	Select [**On**] of the SMTP settings on the Command Center RX.	page 2-45
	Failed to send via FTP.	Select [**On**] of the FTP settings on the Command Center RX.	page 8-9
1106	Failed to send the e-mail.	Check the sender address of SMTP on the Command Center RX.	page 2-45
1131	Failed to send via FTP.	Select [**On**] of the secure protocol settings on the Command Center RX.	page 8-12
1132	Failed to send the e-mail.	Check the following of the SMTP server. • Is SMTP over SSL available? • Is the encryption available?	Refer to the **Command Center RX User Guide**.
	Failed to send via FTP.	Check the following of the FTP server. • Is FTPS available? • Is the encryption available?	—
2101	Failed to send via SMB.	Check the network and SMB settings. • The network cable is connected. • The hub is not operating properly. • The server is not operating properly. • Host name and IP address • Port number	—
	Failed to send via FTP.	Check the network and FTP settings. • The network cable is connected. • The hub is not operating properly. • The server is not operating properly. • Host name and IP address • Port number	—
	Failed to send the e-mail.	Check the network and Command Center RX. • The network cable is connected. • The hub is not operating properly. • The server is not operating properly. • POP3 server name of the POP3 user • SMTP server name	page 2-45

Error Code	Message	Corrective Actions	Reference Page
2102 **2103**	Failed to send via FTP.	Check the network. • The network cable is connected. • The hub is not operating properly. • The server is not operating properly.	—
		Check the following of the FTP server. • Is FTP available? • The server is not operating properly.	—
	Failed to send the e-mail.	Check the network. • The network cable is connected. • The hub is not operating properly. • The server is not operating properly.	—
2201 **2202** **2203** **2231**	Failed to send the e-mail. Failed to send via FTP. Failed to send via SMB.	Check the network. • The network cable is connected. • The hub is not operating properly. • The server is not operating properly.	—
2204	Failed to send the e-mail.	Check the e-mail size limit of the SMTP settings on the Command Center RX.	page 2-45
3101	Failed to send the e-mail.	Check the authentication methods of both the sender and the recipient.	—
	Failed to send via FTP.	Check the network. • The network cable is connected. • The hub is not operating properly. • The server is not operating properly.	—
3201	Failed to send the e-mail.	Check the SMTP user authentication method of the recipient.	—
0007 **4201** **4701** **5101** **5102** **5103** **5104** **7101** **7102** **7103** **720f**	—	Turn the power switch off and back on. If this error occurs several times, make a note of the displayed error code and contact your service representative.	page 2-10
9181	—	The scanned original exceeds the acceptable number of pages of 999. Send the excess pages separately.	—

Clearing Paper Jams

If a paper jam occurs, the message display will display "Paper Jam." and the machine will stop. Refer to these procedures to remove the jammed paper.

Jam Location Indicators

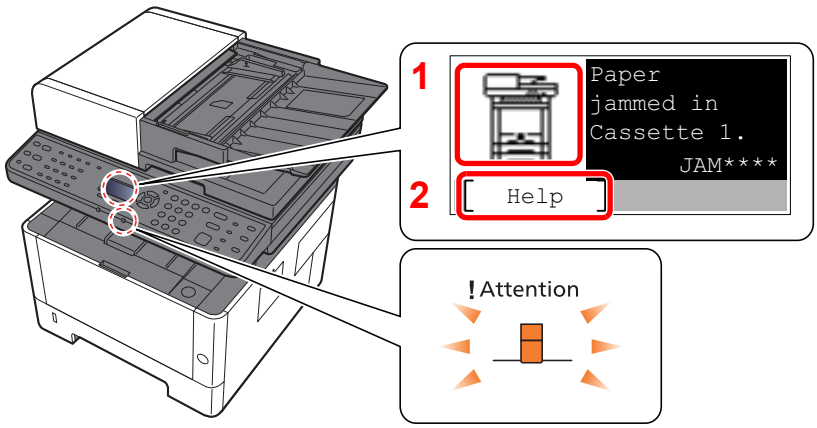

1 Shows the location of a paper jam.

2 Displays the Help screen.

NOTE

For details on Help Screen, refer to the following:

Help Screen (page 2-14)

If a paper jam occurs, the location of the jam will be displayed on the message display as well as the clearing instructions.

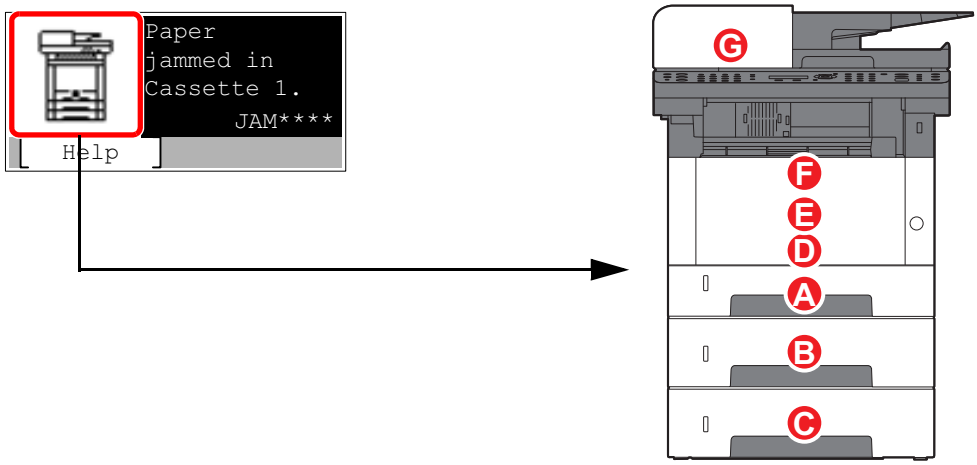

Paper Jam Location Indicator	Paper Jam Location	Reference Page
A	Cassette 1	page 10-31
B	Cassette 2	page 10-33
C	Cassette 3	page 10-35
D	Multipurpose Tray	page 10-37
E	Inside the Machine	page 10-38
F	Rear Cover	page 10-42
G	Document Processor	page 10-46

Remove any jammed paper in Cassette 1

CAUTION

- **Do not reuse jammed papers.**
- **If the paper tears during removal, be sure to remove any loose scraps of paper from inside the machine. Scraps of paper left in the machine could cause subsequent jamming.**

1 Pull Cassette 1 out toward you until it stops.

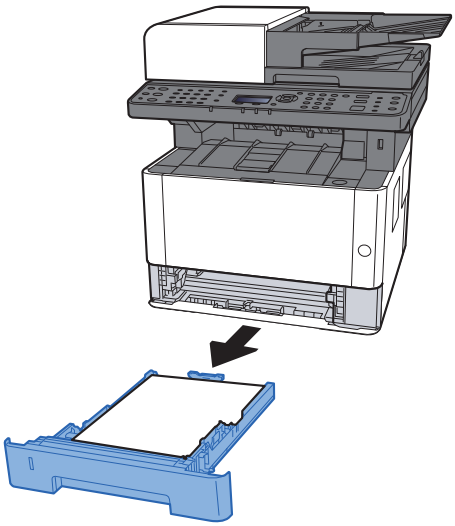

2 Remove any jammed paper.

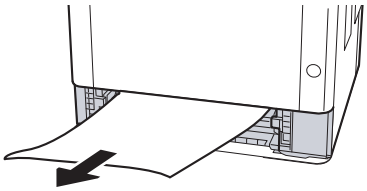

3 Push Cassette 1 back in.

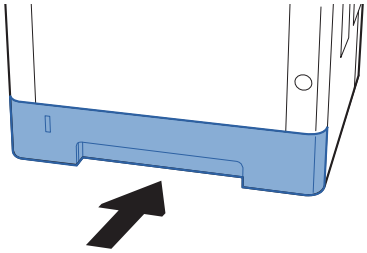

4 Open the front cover.

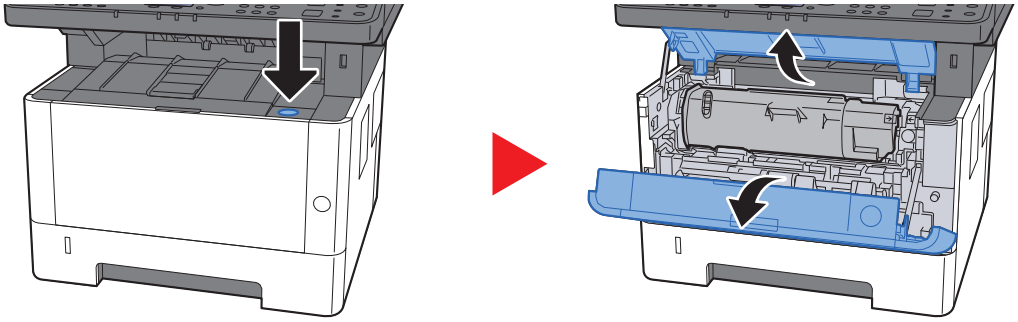

5 Close the front cover.

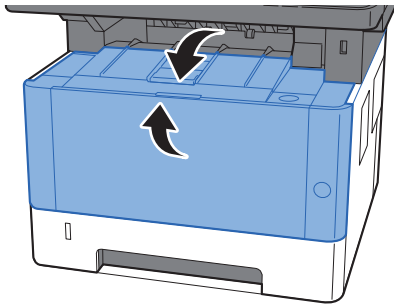

Remove any jammed paper in Cassette 2

CAUTION

- **Do not reuse jammed papers.**
- **If the paper tears during removal, be sure to remove any loose scraps of paper from inside the machine. Scraps of paper left in the machine could cause subsequent jamming.**

1 Pull Cassette 2 out toward you until it stops.

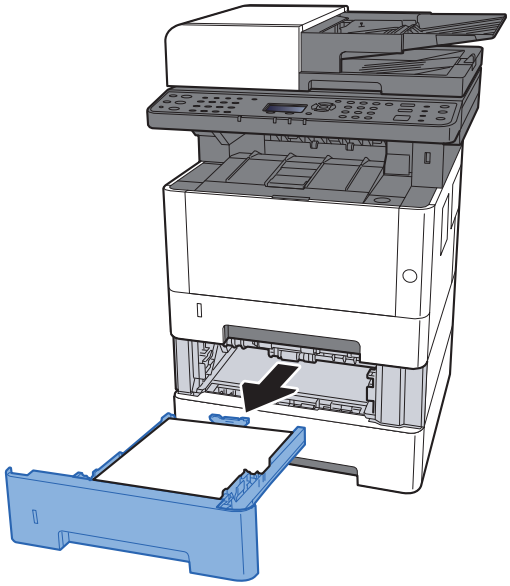

2 Remove any jammed paper.

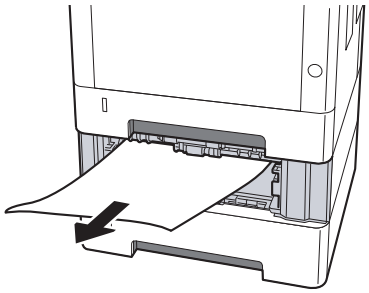

3 Push Cassette 2 back in.

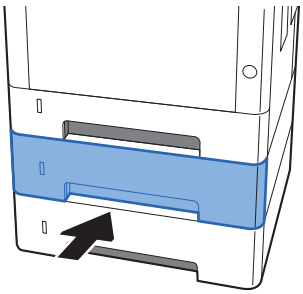

4 Open the front cover.

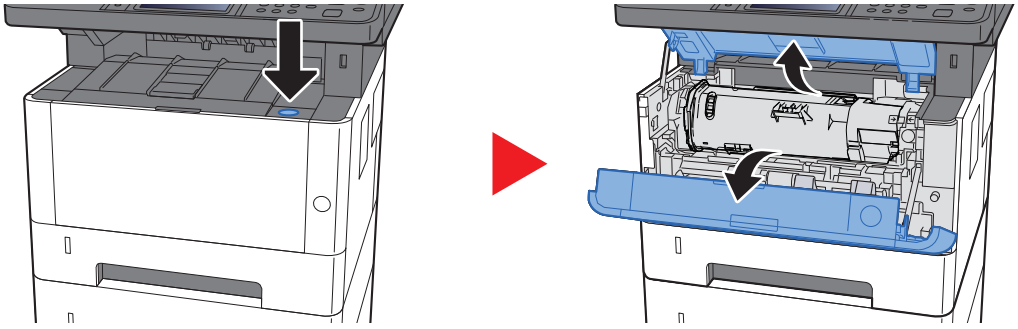

5 Close the front cover.

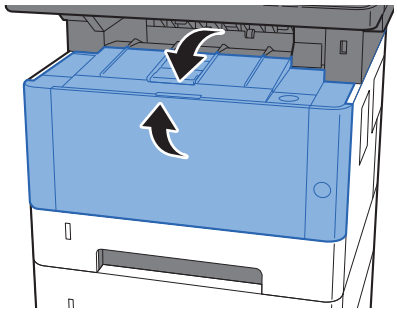

Remove any jammed paper in Cassette 3

CAUTION

- **Do not reuse jammed papers.**
- **If the paper tears during removal, be sure to remove any loose scraps of paper from inside the machine. Scraps of paper left in the machine could cause subsequent jamming.**

1 Pull Cassette 3 out toward you until it stops.

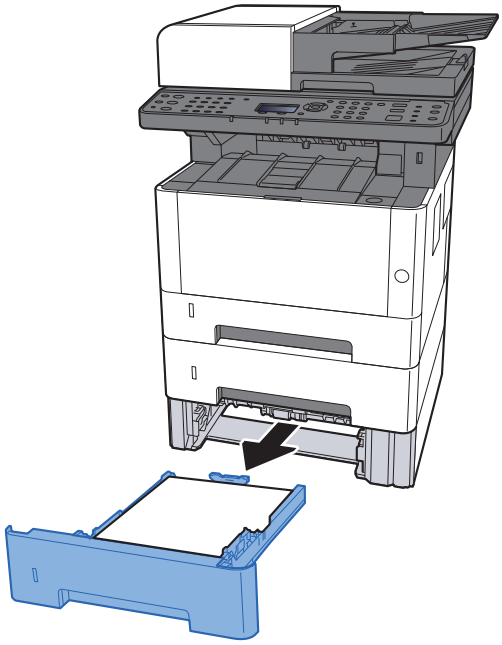

2 Remove any jammed paper.

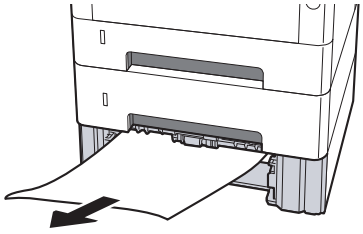

3 Push Cassette 3 back in.

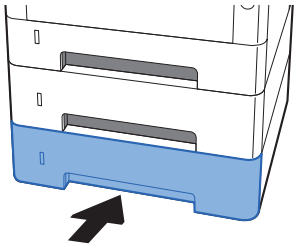

4 Open the front cover.

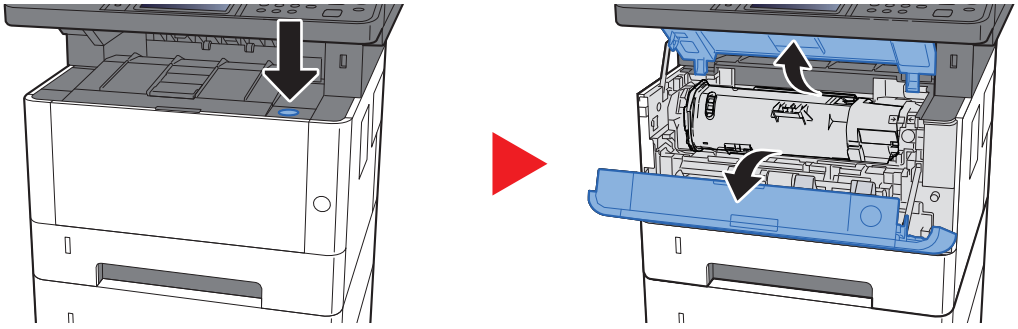

5 Close the front cover.

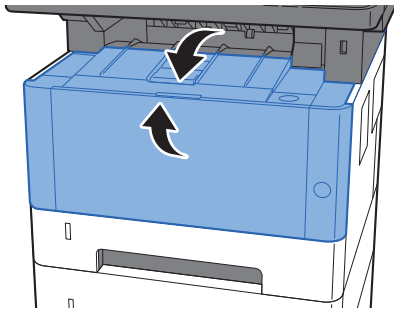

Remove any jammed paper in the Multipurpose Tray

CAUTION

- **Do not reuse jammed papers.**
- **If the paper tears during removal, be sure to remove any loose scraps of paper from inside the machine. Scraps of paper left in the machine could cause subsequent jamming.**

1 Remove any jammed paper.

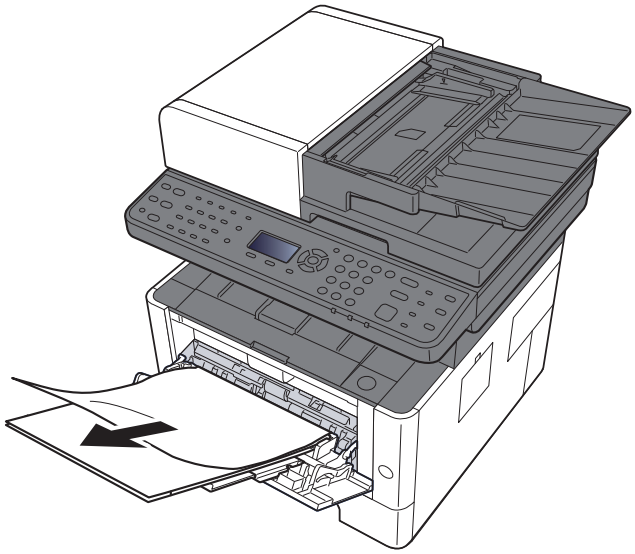

2 Remove all the paper.

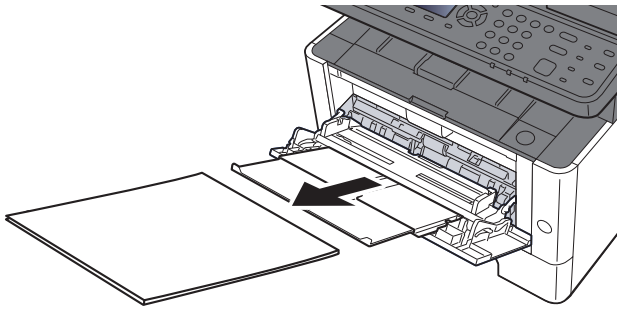

3 Reload the paper.

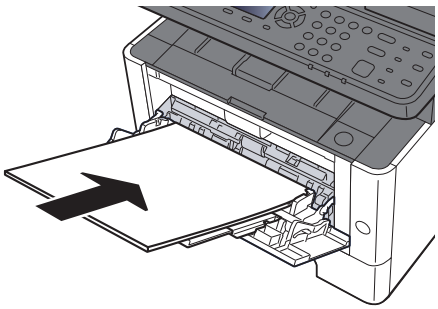

Remove any jammed paper inside of the Machine

CAUTION

- **Do not reuse jammed papers.**
- **If the paper tears during removal, be sure to remove any loose scraps of paper from inside the machine. Scraps of paper left in the machine could cause subsequent jamming.**

1 Pull Cassette 1 out toward you until it stops.

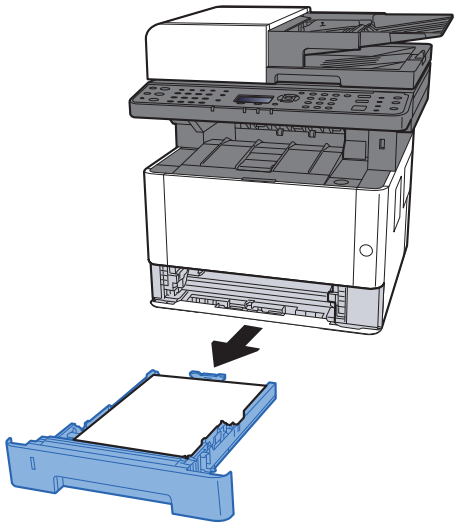

2 Remove any jammed paper.

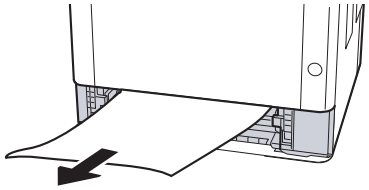

3 Push Cassette 1 back in.

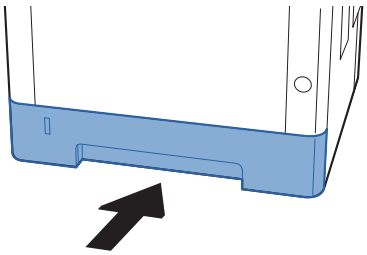

4 Open the front cover.

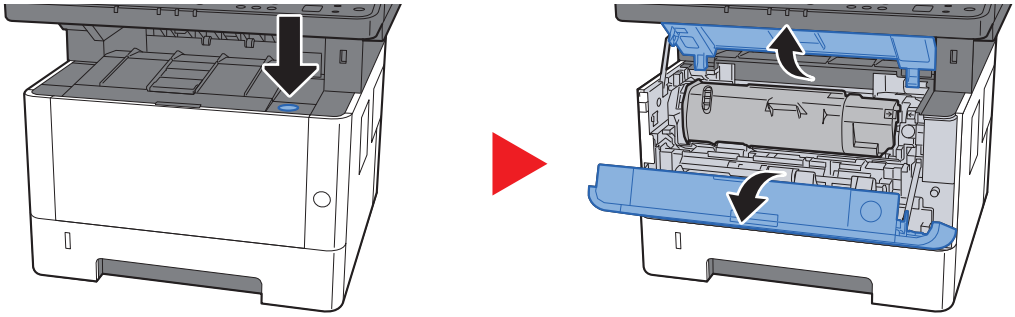

5 Lift the developer unit together with the toner container out of the machine.

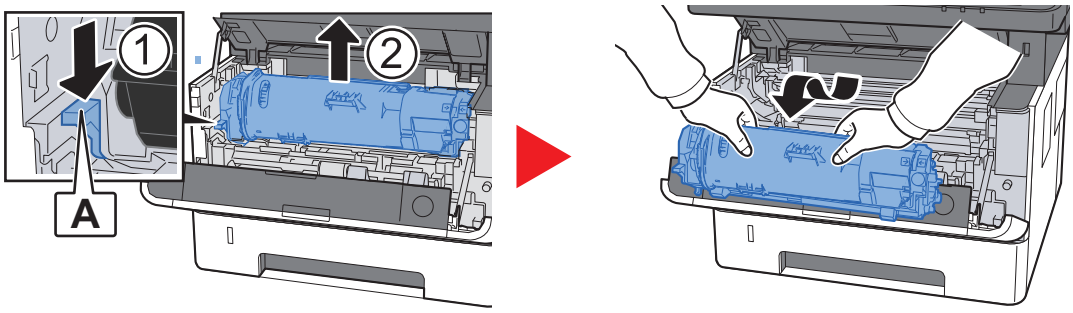

IMPORTANT

Do not touch the developer unit or subject the developer unit to shock. Print quality will be degraded.

6 Place the developer unit together with the toner container flat on a clean, level surface.

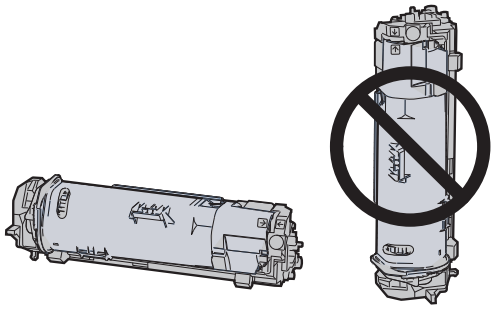

IMPORTANT

Do not place the developer unit together with the toner container on end.

7 Remove the drum unit from the machine.

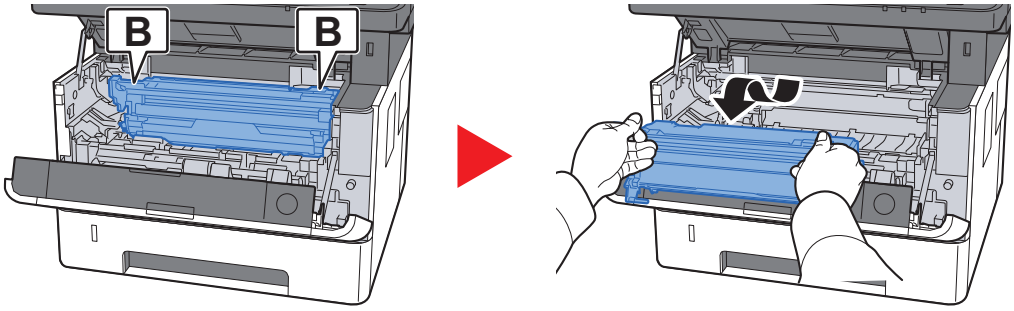

IMPORTANT

- **The fuser unit inside the machine is hot. Do not touch it, as it may result in burn injury.**
- **Do not touch the drum or subject the drum to shock. Print quality will be degraded if the drum is exposed to direct sunlight or intense light.**

8 Place the drum unit flat on a clean, level surface.

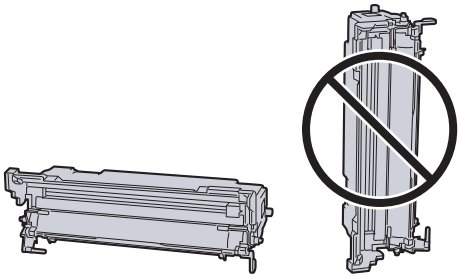

IMPORTANT

Do not place the drum unit on end.

9 Open Feed Cover (C).

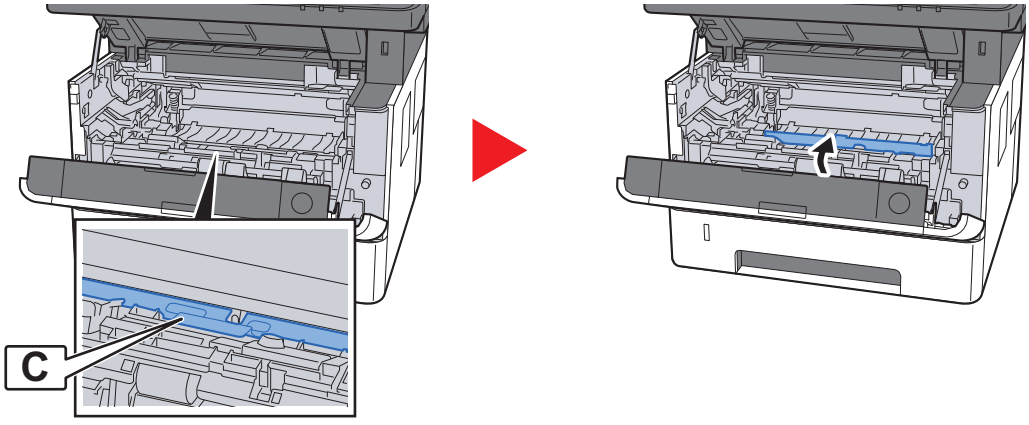

10 Remove any jammed paper.

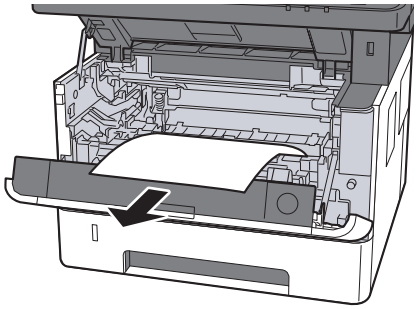

11 Push Feed Cover back in.

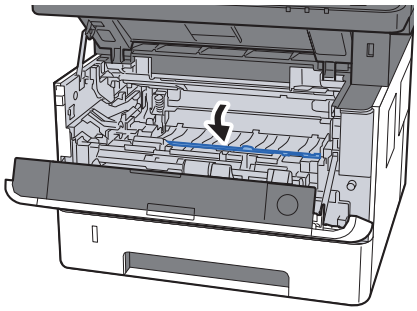

12 Return the drum unit to the original position.

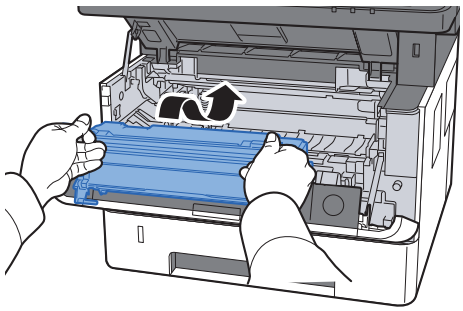

13 Return the developer unit together with the toner container to its position, aligning the guides at both ends with the slots in the machine.

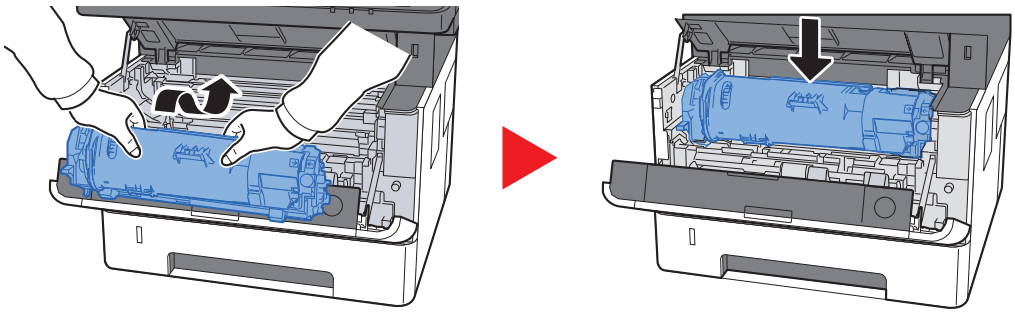

14 Close the front cover.

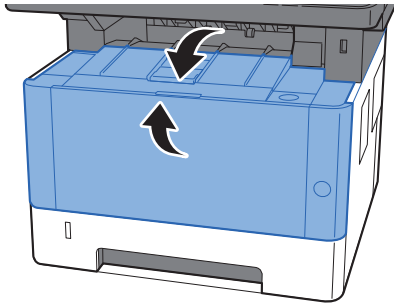

Remove any jammed paper in Rear Cover

CAUTION

The fixing unit is extremely hot. Take sufficient care when working in this area, as there is a danger of getting burned.

1 Open Rear Cover.

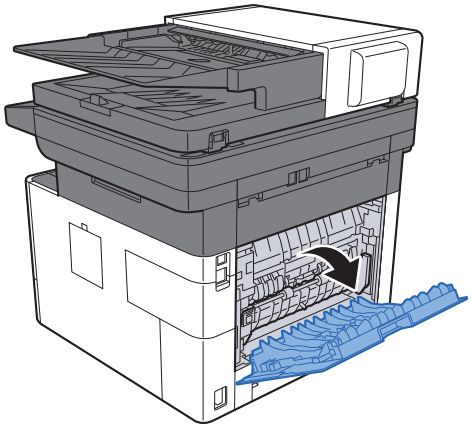

2 Remove any jammed paper.

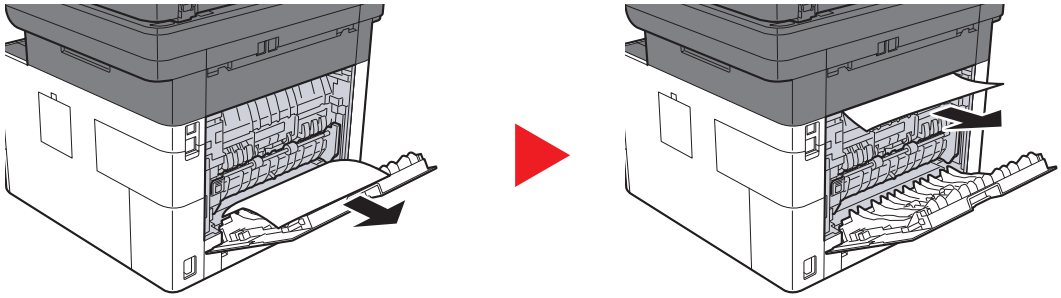

3 Open the fuser cover (D).

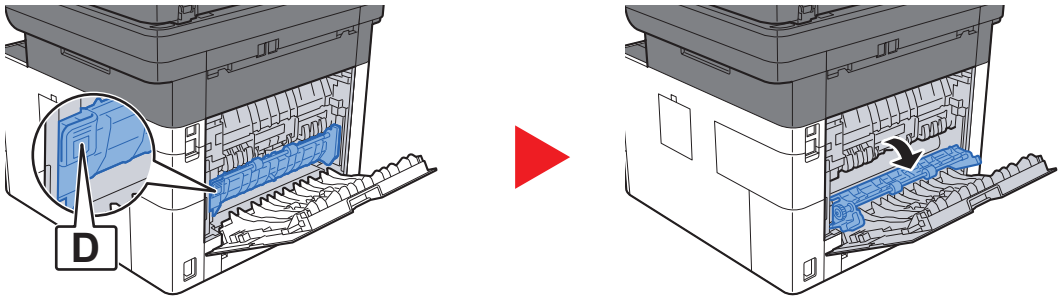

4 Remove any jammed paper.

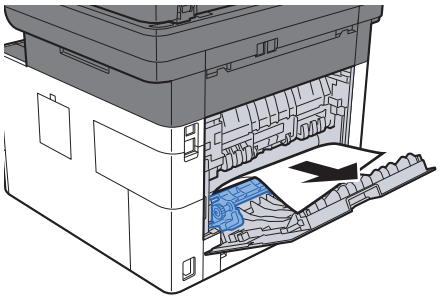

5 Pull Cassette 1 out toward you until it stops.

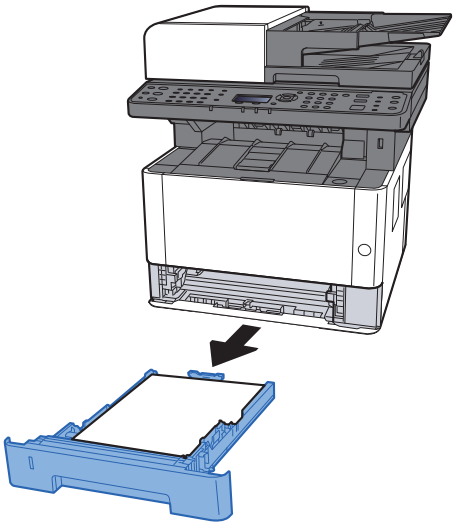

6 Open Feed Cover.

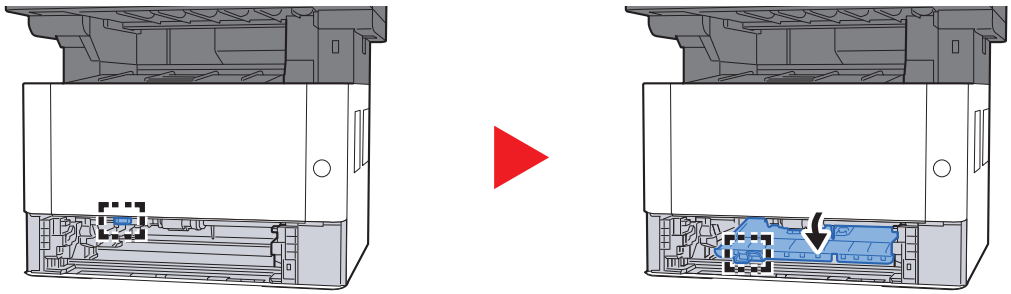

7 Remove any jammed paper.

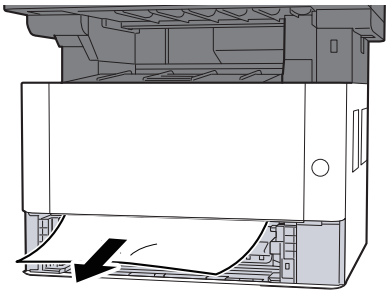

8 Push Feed Cover back in.

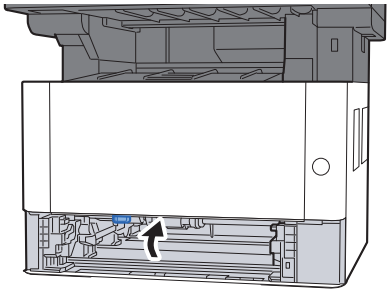

9 Push Cassette 1 back in.

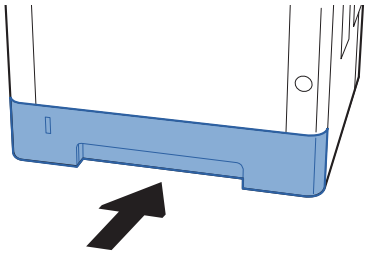

10 Push Rear Cover.

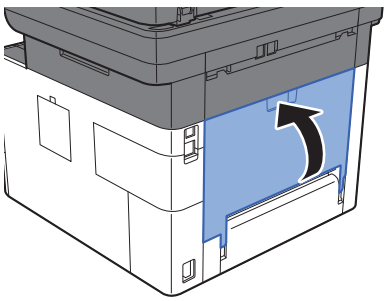

11 Open the front cover.

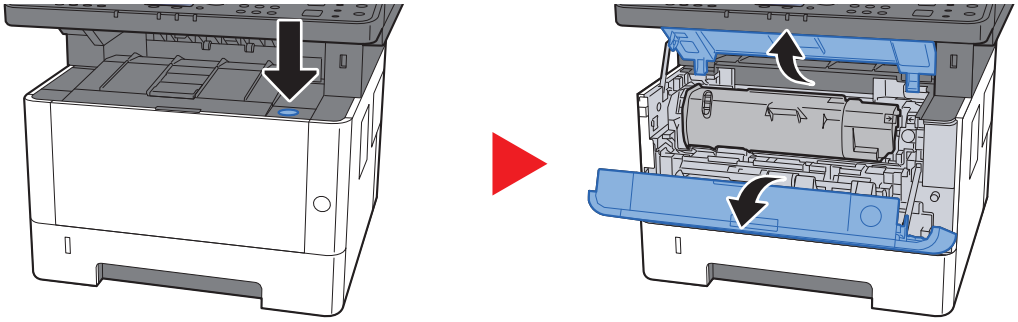

12 Close the front cover.

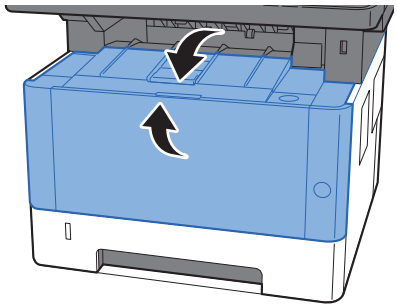

Remove any jammed paper in the Document Processor

CAUTION

- **Do not reuse jammed papers.**
- **If the paper tears during removal, be sure to remove any loose scraps of paper from inside the machine. Scraps of paper left in the machine could cause subsequent jamming.**

1 Remove the originals from the Original Table.

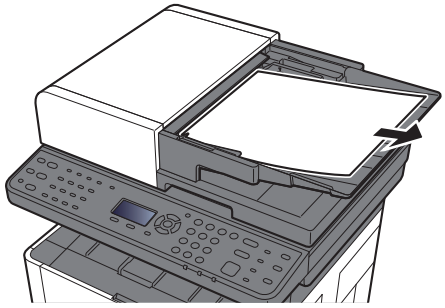

2 Open the front cover and remove any jammed paper.

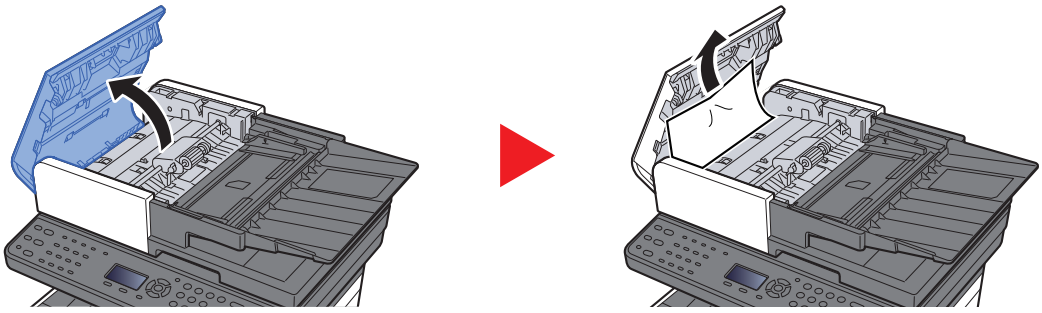

3 Remove originals inside the document processor.

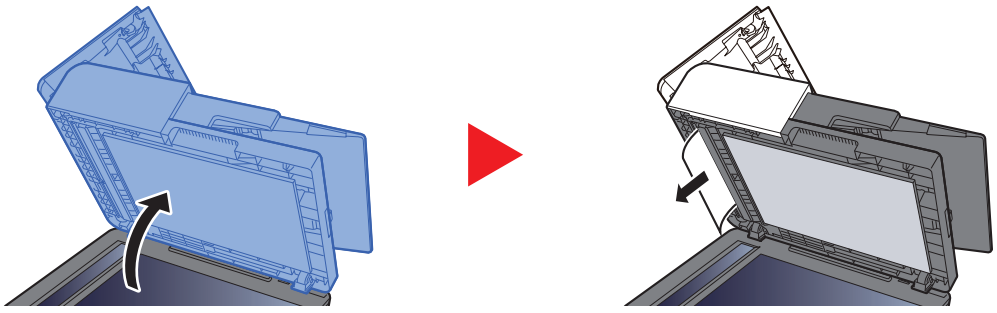

4 Push the cover.

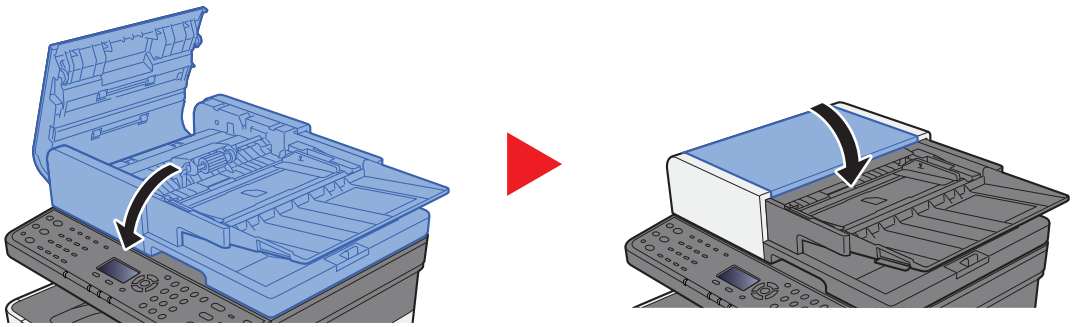

11 Appendix

This chapter explains the following topics:

Optional Equipment 11-2
Overview of Optional Equipment 11-2
Optional Applications 11-6
Starting Application Use 11-6
Checking Details of Application 11-7
Character Entry Method 11-8
Using the Keys 11-8
Selecting Type of Characters 11-9
Characters That Can be Entered Using the Numeric Keys 11-9
Entering Symbols 11-10
Entering Characters 11-10
Entering Using the Character Selection Screen 11-12
Paper 11-13
Basic Paper Specifications 11-13
Choosing the Appropriate Paper 11-14
Special Paper 11-17
Specifications 11-21
Machine 11-21
Copy Functions 11-22
Printer Functions 11-23
Scanner Functions 11-23
Document Processor 11-24
Paper Feeder 11-24
Glossary 11-25

Optional Equipment

Overview of Optional Equipment

The following optional equipment is available for the machine.

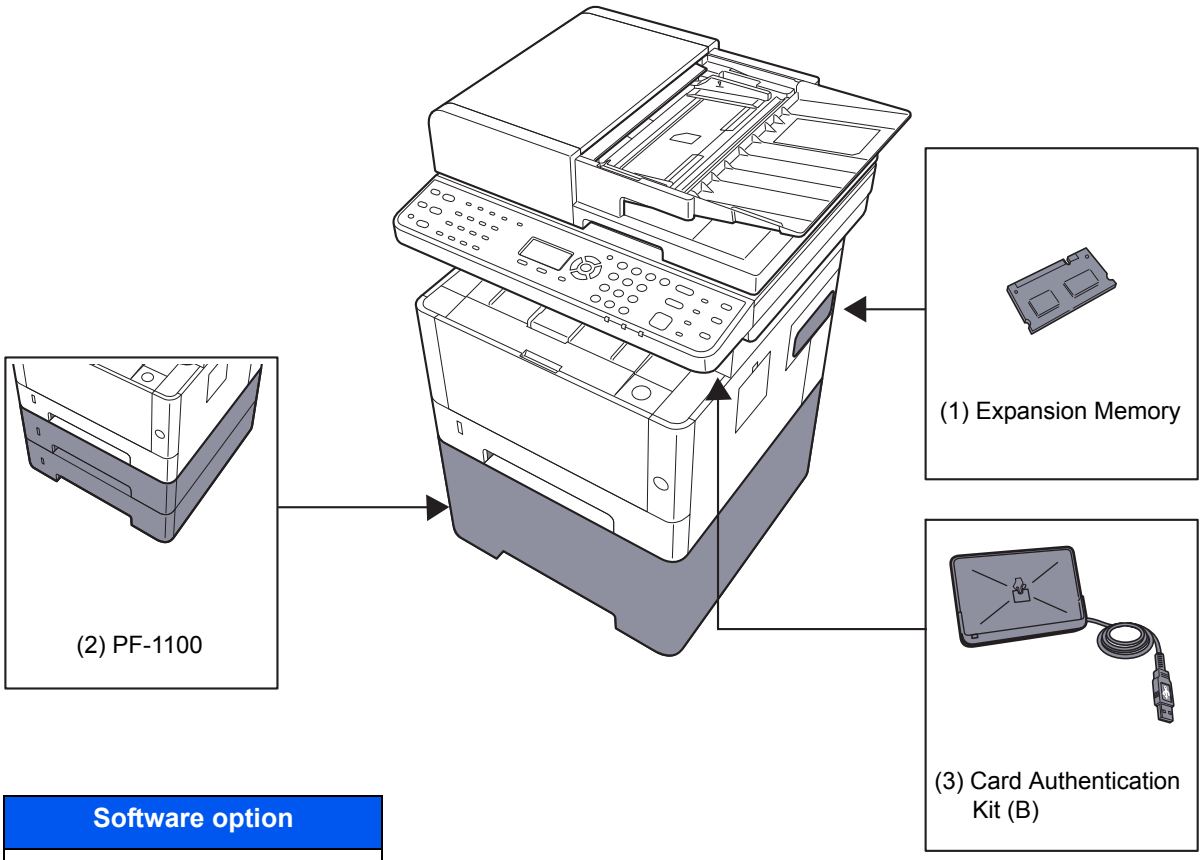

Software option
(4) UG-33

(5) SD/SDHC Memory Card
(6) USB Keyboard

(1) "Expansion Memory"

The machine can perform the more multiple jobs simultaneously by adding more memories. You can increase the machine's memory up to 1,536 MB by plugging in the optional memory modules.

Precautions for Handling the Memory Modules

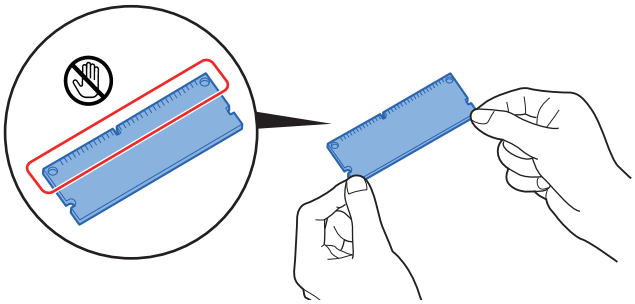

To protect electronic parts, discharge static electricity from your body by wearing an antistatic wrist strap, if possible, when you install the memory modules. If you do not have a wristband, touch a metal object to discharge static electricity before inserting the memory.

Installing the Memory Modules

1 Turn off the machine and disconnect the power cord and interface cable.

2 Remove the covers.

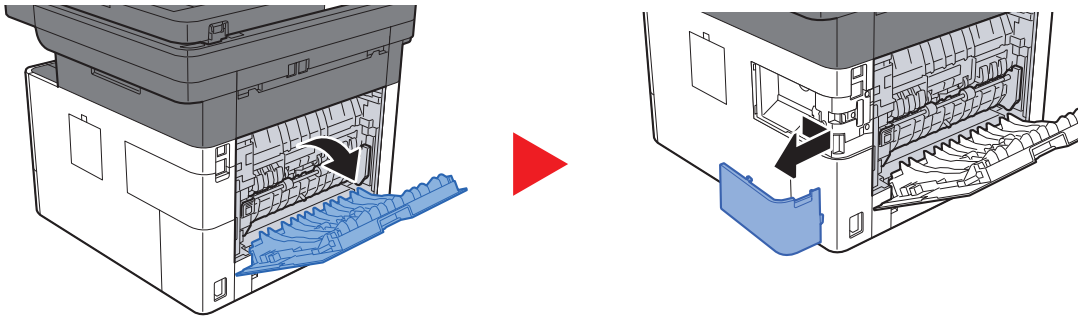

3 Remove the memory module from its package.

4 With the memory connection terminal pointing toward the socket, align the cut-out part with the socket terminal and insert directly in at an angle.

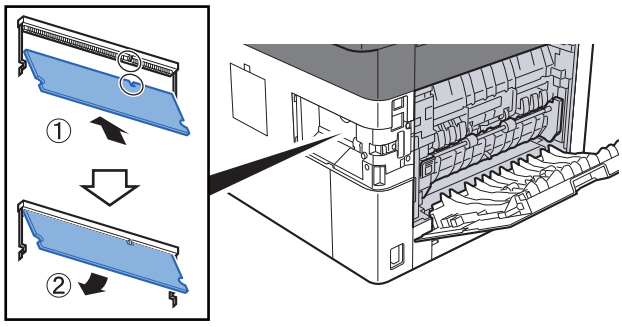

5 Carefully press the inserted memory down and into the machine.

6 Reinstall the covers.

(2) PF-1100 "Paper Feeder"

The paper feeder can be installed in the printer.

Loading in the Cassette (page 3-4)

(3) Card Authentication Kit(B) "Card Authentication Kit"

User login administration can be performed using ID cards. To do so, it is necessary to register ID card information on the previously registered local user list. For more information about how to register this information, refer to the following:

Card Authentication Kit(B) Operation Guide

(4) UG-33 "ThinPrint Option"

This application allows print data to be printed directly without a print driver.

(5) "SD/SDHC Memory Card"

An SD/SDHC memory card is useful for storing fonts, macros, and overlays. The machine is equipped with a slot for an SDHC memory card with a maximum size of 32 GB, and an SD memory card with a maximum size of 2 GB.

IMPORTANT

Unencrypted data is saved on the SD/SDHC memory card.

Exercise caution when saving sensitive documents.

Reading the SD/SDHC Memory Card

Once inserted in the machine's slot, the contents of the SD/SDHC memory card can be read from the operation panel or automatically when you power on or reset the machine.

Installing and Formatting the SD/SDHC Memory Card

To use an unused SD/SDHC memory card, you must first use the machine to format the SD/SDHC memory card.

Format SD Card (page 8-26)

1. Power off the machine and unplug the power cord.
2. Remove the cover.

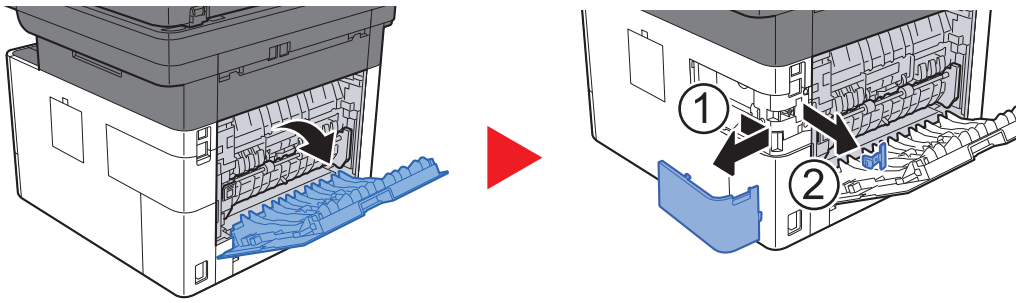

3 Insert the SD/SDHC memory card into the SD/SDHC memory card slot.

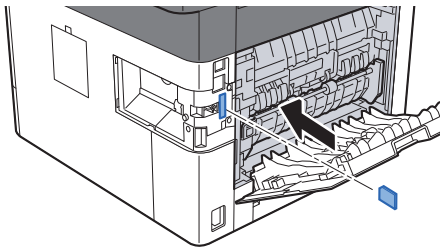

4 Replace the covers.

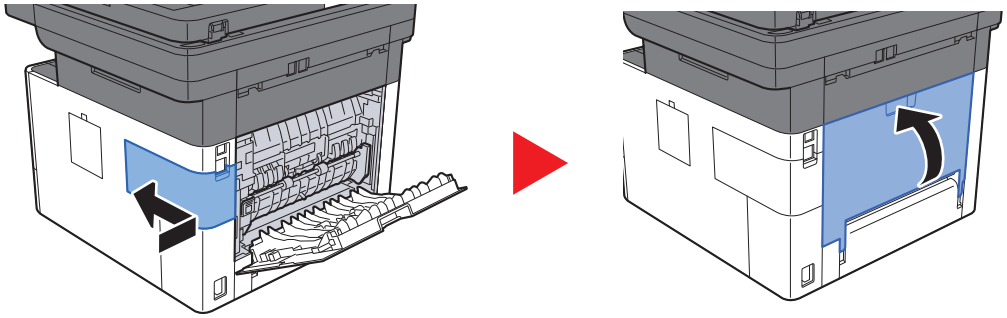

(6) USB Keyboard "USB Keyboard"

A USB keyboard can be used to enter information into the text fields on the operation panel. A special mount is also available to install the keyboard on the machine. Please contact your dealer or service representative for information on keyboards that are compatible with your machine before you purchase one.

Optional Applications

The applications listed below are installed on this machine.

Application
Card Authentication Kit
ThinPrint Option*1

*1 This can be used on a trial basis for a limited time.

NOTE

- Restrictions such as the number of times the application can be used during the trial period differ depending on the application.
- If you change the date/time while using the trial version of an application, you will no longer be able to use the application.

Starting Application Use

1 Display the screen.

1 [**System Menu/Counter**] key > [▲] [▼] key > [**System/Network**] > [**OK**] key

NOTE

If the login user name entry screen appears during operations, enter a login user name and password, and select [**Login**]. For this, you need to login with administrator privileges.

The factory default login user name and login password are set as shown below.

Model Name	Login User Name	Login Password
ECOSYS M2235dn/ECOSYS M2735dn	3500	3500

2 [▲] [▼] key > [**Op Functions**] > [**OK**] key

2 Activate the application.

1 Select the desired application, and select the [**OK**] key.

NOTE

You can view detailed information on the selected application by selecting [**Menu**] > [▲] [▼] key > [**Detail**] > [**OK**] key.

2 [▲] [▼] key > [**Official**] > [**OK**] key

To use the application as a trial, select [**Trial**] without entering the license key.

3 Enter the license key > [**OK**] key

Some applications do not require you to enter a license key. If the license key entry screen does not appear, go to Step 6.

4 Select [**Yes**].

NOTE
If you started the Thin Print option and entered the license key, turn the power OFF/ON.

Checking Details of Application

1 Display the screen.

1 [**System Menu/Counter**] key > [▲] [▼] key > [**System/Network**] > [**OK**] key

NOTE
If the login user name entry screen appears during operations, enter a login user name and password, and select [**Login**]. For this, you need to login with administrator privileges.

The factory default login user name and login password are set as shown below.

Model Name	Login User Name	Login Password
ECOSYS M2235dn/ECOSYS M2735dn	3500	3500

2 [▲] [▼] key > [**Op Functions**] > [**OK**] key

2 Check the details of application.

1 Select the desired application, and select [**Menu**].

2 [▲] [▼] key > [**Detail**] > [**OK**] key

You can view detailed information on the selected application. Select the [►] key to view the next screen. Select the [◄] key to return to the previous screen.

The table below lists the item you can view.

Item
Function Name
License On
Trial Counts
Date of Trial
Status

Extend the trial period.

[◄] [►] key > [**Date of Trial**] > [**Extend**] > [**Yes**]

The trial period is extended.

Character Entry Method

This section explains how to enter characters.

Using the Keys

Use the following keys to enter characters.

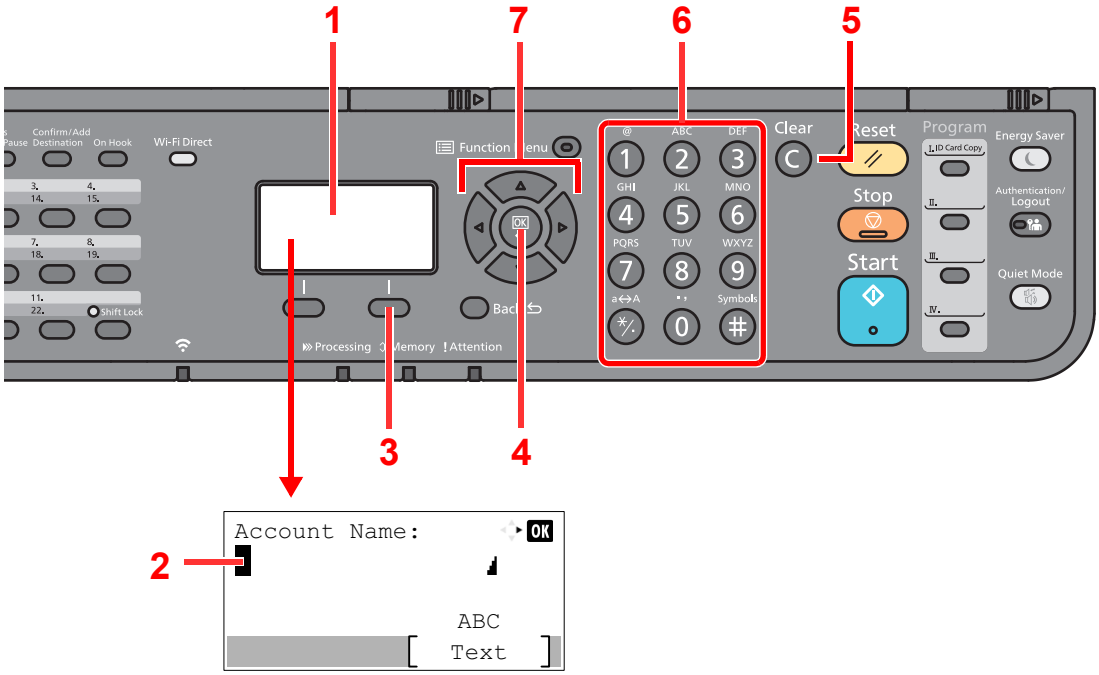

No.	Display/Key	Description
1	Message Display	Displays entered characters.
2	Cursor	Characters are entered at the position of the cursor.
3	Right Select key	Select to select the type of characters you want to enter. (When [**Text**] is displayed)
4	[**OK**] key	Select to finalize entry and return to the screen before the entry. To enter a symbol, select to confirm the selected symbol.
5	[**Clear**] key	Select to delete characters.
6	Numeric keys	Select to enter characters and symbols.
7	Arrow keys	Select to select the entry position, or select a character from the character list.

Selecting Type of Characters

To enter characters, the following three types are available:

Types	Description
ABC	To enter alphabets.
123	To enter numerals.
Symbols	To enter symbols.

In a character entry screen, select [**Text**] to select the type of characters you want to enter.

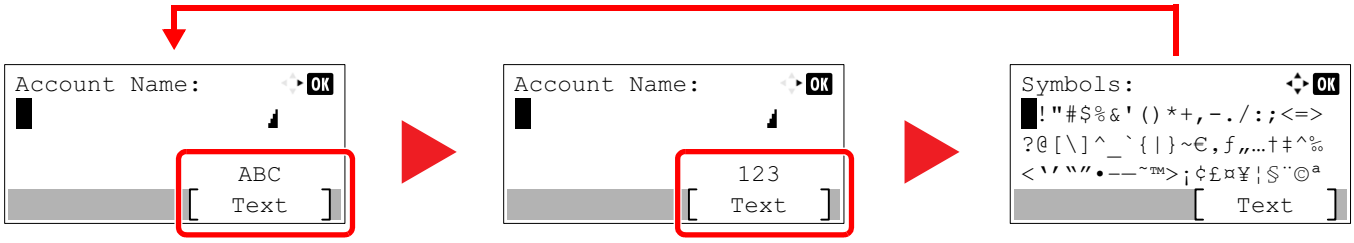

Each time you select [**Text**], the character type switches as follows: [**ABC**], [**123**], [**Symbols**], [**ABC**] ...

Characters That Can be Entered Using the Numeric Keys

The following table lists the characters that can be entered using the numeric keys.

Keys	Characters (Each press of a key changes the character in the order from left to right.)
.@ 1	. @ - _ / : ~ 1 (Repeats from the first character on the left)
	1 (During number entry)
ABC 2	a b c A B C 2 (Repeats from the first character on the left)
	2 (During number entry)
DEF 3	d e f D E F 3 (Repeats from the first character on the left)
	3 (During number entry)
GHI 4	g h i G H I 4 (Repeats from the first character on the left)
	4 (During number entry)
JKL 5	j k l J K L 5 (Repeats from the first character on the left)
	5 (During number entry)
MNO 6	m n o M N O 6 (Repeats from the first character on the left)
	6 (During number entry)
PQRS 7	p q r s P Q R S 7 (Repeats from the first character on the left)
	7 (During number entry)
TUV 8	t u v T U V 8 (Repeats from the first character on the left)
	8 (During number entry)

Keys	Characters (Each press of a key changes the character in the order from left to right.)																	
WXYZ 9	w	x	y	z	W	X	Y	Z	9	(Repeats from the first character on the left)								
	9 (During number entry)																	
.,' 0	.	,	-	_	'	!	?	(space)	0	(Repeats from the first character on the left)								
	0 (During number entry)																	
a↔A *	Select to change the character in the cursor position between upper case and lower case.																	
	"*" or "." (During number entry)																	
Symbols #	!	"	#	$	%	&	'	(	)	*	+	,	-	.	/	:	;	Displays the symbol list. For details, refer to the following: Entering Symbols (page 11-10)
	<	=	>	?	@	[	\	]	^	_	`	{	|	}	~			
	# (During number entry)																	
	* Depending on the functions, there are symbols that cannot be entered.																	

Entering Symbols

Symbols can be entered.

1 Select the [**#**] key. Displays the symbol list.

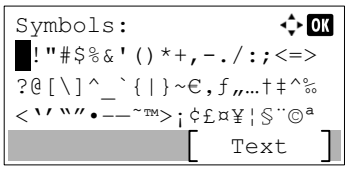

2 Select the [▲], [▼], [►] or [◄] key to move the cursor and select the symbol to be entered.

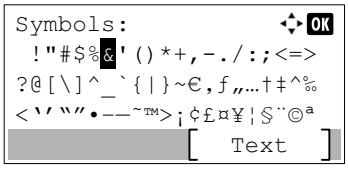

3 Select the [**OK**] key. The selected symbol is entered.

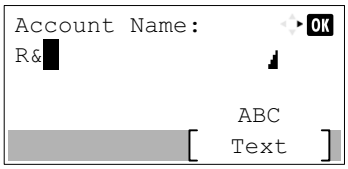

Entering Characters

Follow the steps shown below to enter "R&D" for example.

1 Select the [**7**] key three times. [**r**] is entered.

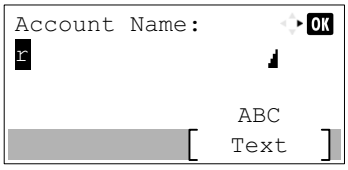

2 Select the [***/.**] key. [**r**] changes to [**R**].

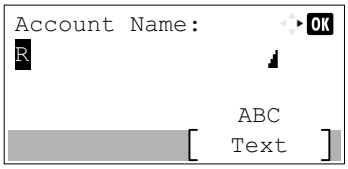

3 Select the [►] key. The cursor moves to the right.

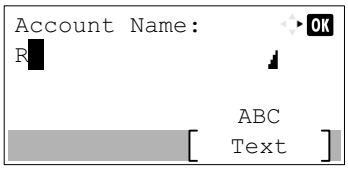

4 Select the [**#**] key. Displays the symbol list.

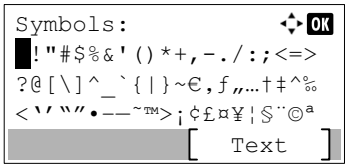

5 Select the [▲] or [▼] key to move the cursor and select [**&**].

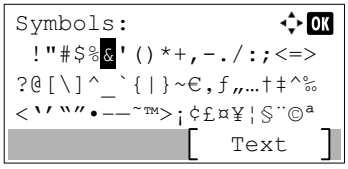

6 Select the [**OK**] key. [**&**] is entered.

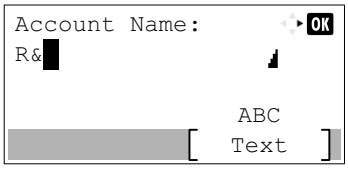

7 Select the [**3**] key four times. [**D**] is entered.

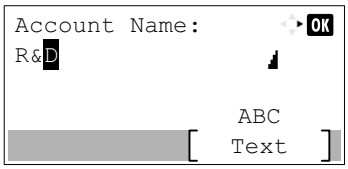

8 Select the [►] key.

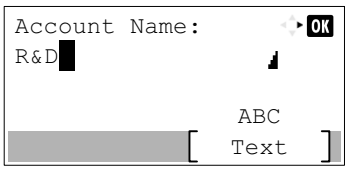

Entering Using the Character Selection Screen

If "Login Operation" is [Select Character], then the screen is displayed to enter details by selecting from the characters on the message display. For details on changing the login operation method, refer to the following:

Function Defaults (page 8-24)

1 Select the [▲], [▼], [►] or [◄] key to move the cursor and select the character to be entered.

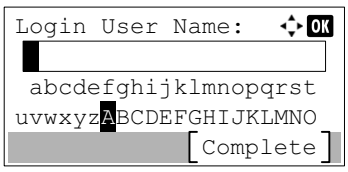

2 Select the [**OK**] key. The selected character is entered.

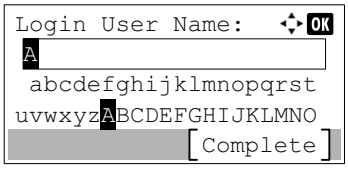

You can go back one character by selecting the [**Clear**] key.

3 When the entry is complete, select [**Complete**].

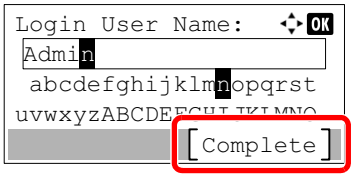

Paper

This section explains the paper sizes and types that can be used in the paper source.

For details on the sizes, types, and number of sheets of paper that can be loaded in each paper tray, refer to the following:

Specifications (page 11-21)

Basic Paper Specifications

This machine is designed to print on standard copy paper as used in regular ('dry') copiers and page printers such as laser printers. It also supports a variety of other types of paper that conform to the specifications given in this appendix.

Be careful when choosing paper. Paper unsuitable for the machine may cause jams or may be wrinkled.

Supported Paper

Use standard copy paper for regular copiers or laser printers. The printing quality will be affected by the quality of paper. Poor quality paper may result in unsatisfactory output.

Basic Paper Specifications that can be Used with This Machine

The following table lists the specifications of paper that is supported with this machine. Refer to the subsequent sections for further details.

Criteria	Specifications
Weight	Cassettes: 60 to 163 g/m^2
	Multipurpose tray: 60 to 220 g/m^2, 209 g/m^2 (Cardstock)
Dimensional accuracy	±0.7 mm
Squareness of corners	90° ±0.2°
Moisture content	4 to 6%
Pulp content	80% or more

NOTE

Some recycled paper does not meet requirements for use with this machine as listed in the Basic Paper Specifications shown below, such as moisture or pulp content. For this reason, we recommend purchasing a small amount of recycled paper as a sample for testing prior to use. Choose recycled paper that gives the best printing results and contains low levels of paper dust.

We are not responsible for the problems occurred from the use of paper that does not conform to our specifications.

Choosing the Appropriate Paper

This section describes guidelines for choosing paper.

Condition

Avoid using paper with bent corners or that is curled, dirty, or torn. Do not use paper that has a rough surface or paper fiber lint, or that is especially delicate. Use of paper in any of these conditions will not only deliver poor copies but may also cause jams and shorten the useful life of the machine. Choose paper with a smooth and even surface; however, avoid coated paper or paper with a treated surface as it may damage the drum or fusing unit.

Ingredients

Do not use paper such as paper that has been coated or surface-treated or paper that contains plastic or carbon. Those types of paper may produce harmful fumes from the heat of printing and may damage the drum.

Be sure to use the standard paper that contains at least 80% pulp, i.e., not more than 20% of the total paper content consists of cotton or other fibers.

Smoothness

The paper surface should be smooth, but it must be uncoated. With paper that is too smooth and slippery, several sheets may accidentally be supplied at once, causing jams.

Basis Weight

In countries that use the metric system, basis weight is the weight in grams of one sheet of paper one square meter in area. In the United States, basis weight is the weight in pounds of one ream (500 sheets) of paper cut to the standard size (or trade size) for a specific grade of paper. Paper that is too heavy or too light may be supplied incorrectly or cause paper jams, which may cause excessive wear of the machine. Mixed paper weight (i.e., thickness) may cause several sheets to be supplied at once accidentally and may also cause blurring or other printing problems if the toner fails to adhere correctly.

Moisture Content

Paper moisture content is the ratio of moisture to dryness expressed as a percentage. Moisture affects how the paper is supplied, the electrostatic chargeability of the paper, and how the toner adheres.

Paper moisture content varies depending on the relative humidity in the room. High relative humidity causes paper to become damp, making the edges expand so it appears wavy. Low relative humidity causes paper to lose moisture, making the edges tighten and weakening print contrast.

Wavy or tight edges may cause the paper to slip when it is supplied. Try to keep the moisture content between 4 to 6%.

To maintain the right level of moisture content, bear in mind the following considerations.

- Store paper in a cool, well-ventilated place.
- Store paper flat and unopened in the package. Once the package is opened, reseal it if the paper is not to be used for a while.
- Store paper sealed in the original package and box. Put a pallet under the carton to keep it raised above the floor. Especially during rainy seasons keep the paper a sufficient distance away from wooden or concrete floors.
- Before using paper that has been stored, keep it at the proper moisture level for at least 48 hours.
- Do not store paper where it is exposed to heat, sunlight, or dampness.

Other Paper Specifications

Porosity: The density of the paper fibers.

Stiffness: Paper must be stiff enough or it may buckle in the machine, causing jams.

Curl: Most paper naturally tends to curl after the package is opened. When paper passes through the fixing unit, it curls upward slightly. To deliver flat printouts, load the paper so that the curl faces towards the bottom of the paper tray.

Static electricity: During printing, paper is electrostatically charged so that the toner adheres. Choose paper that can be discharged quickly so that copies do not cling together.

Whiteness: Paper whiteness affects print contrast. Use whiter paper for sharper, brighter copies.

Quality: Machine problems may occur if sheet sizes are not uniform or if corners are not square, edges are rough, sheets are uncut, or edges or corners are crushed. In order to prevent these problems, be especially careful when you cut the paper yourself.

Packaging: Choose paper that is properly packaged and stacked in boxes. Ideally, the packaging itself should have been treated with a coating to inhibit moisture.

Specially treated paper: We do not recommend printing onto the following types of paper, even if it conforms to the basic specifications. When you use these kinds of paper, purchase a small amount first as a sample to test.

- Glossy paper
- Watermarked paper
- Paper with an uneven surface
- Perforated paper

Paper Sizes that can be Used with This Machine

Paper of the following sizes is supported by the machine.

Measurements in the table take into account a ±0.7 mm dimensional accuracy for length and width. Corner angles must be 90° ± 0.2°.

Multipurpose Tray

- B6 (182 × 128 mm)
- Hagaki (Cardstock) (100 × 148 mm)
- Oufuku hagaki (Return postcard) (148 × 200 mm)
- Envelope Monarch (3-7/8 × 7-1/2")
- Envelope #10 (4-1/8 × 9-1/2")
- Envelope DL (110 × 220 mm)
- Envelope C5 (162 × 229 mm)
- Envelope #9 (3-7/8 × 8-7/8")
- Envelope #6 3/4 (3-5/8 × 6-1/2")
- Youkei 4 (105 × 235 mm)
- Youkei 2 (114 × 162 mm)
- Custom (70 × 148 to 216 × 356 mm)

Cassettes or Multipurpose Tray

- Executive (7-1/4 × 10-1/2")
- Letter
- Legal
- A4 (297 × 210 mm)
- B5 (257 × 182 mm)
- A5-R (148 × 210 mm)
- A5 (210 × 148 mm)
- A6 (148 × 105 mm)
- B5(ISO) (176 × 250 mm)
- Oficio II
- 216 × 340 mm
- 16K (273 × 197 mm)
- Statement
- Folio (210 × 330 mm)
- Custom (Cassette: 105 × 148 to 216 × 356 mm, Multipurpose Tray: 70 × 148 to 216 × 356 mm)

Special Paper

This section describes printing onto special paper and print media.

Special Paper that can be Used with This Machine

- Transparencies
- Preprinted paper
- Bond paper
- Recycled paper
- Vellum
- Thin paper
- Letterhead
- Colored paper
- Prepunched paper
- Envelopes
- Hagaki (Cardstock)
- Thick paper
- Labels
- High-quality paper

When using these paper and media, choose those that are designed specifically for copiers or page printers (such as laser printers). Use the multipurpose tray for transparencies, vellum, thin paper, envelopes, cardstocks and label paper.

Choosing Special Paper

Although special paper that meets the following requirements can be used with the machine, print quality will vary considerably due to differences in the construction and quality of special paper. Thus, special paper is more likely than regular paper to cause printing problems. Before purchasing special paper in volume, try testing a sample to ensure the print quality is satisfactory. General precautions when printing onto special paper are given below. Note that we are not responsible for any harm to the user or damage to the machine caused by moisture or specifications of special paper.

Select a cassette or multipurpose tray for special paper.

Transparencies

Transparencies must be able to withstand the heat of printing. Transparencies must meet the following conditions.

Heat resistance	Must withstand at least 190°C
Thickness	0.100 to 0.110 mm
Material	Polyester
Dimensional accuracy	±0.7 mm
Squareness of corners	90° ±0.2°

To avoid problems, use the multipurpose tray for transparencies and load transparencies with the long side facing the machine.

If transparencies jam frequently at output, try pulling the leading edge of sheets gently as they are ejected.

Label

Be sure to feed labels from the multipurpose tray.

For selecting labels, use extreme care so that the adhesive may not come in direct contact with any part of the machine and that the labels are not easily peeled from the carrier sheet. Adhesives that stick to the drum or rollers and peeled labels remaining in the machine may cause a failure.

When printing onto labels, you must be liable for the print quality and possible trouble.



Labels consist of three layers as shown in the illustration. The adhesive layer contains materials that are easily affected by the force applied in the machine. The carrier sheet bears the top sheet until the label is used. This composition of labels may cause more problems.

The label surface must be covered completely with the top sheet. Gaps between labels may cause peeling of labels, resulting in a serious failure.

Some label paper has large margins on the top sheet. When using such paper, do not peel these margins from the carrier sheet before completing output.

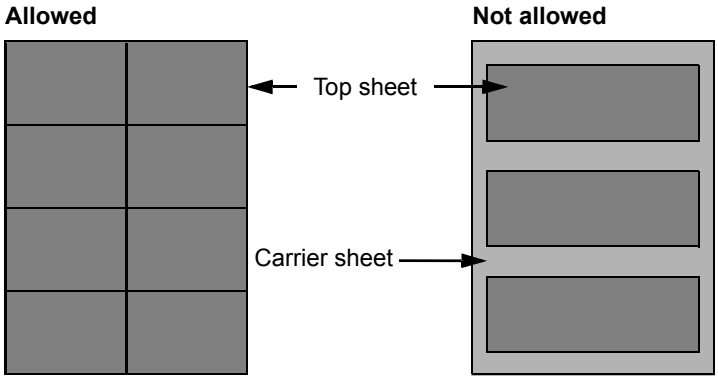

Use label paper that conforms to the following specifications.

Top sheet weight	44 to 74 g/m²
Basis weight (overall paper weight)	104 to 151 g/m²
Top sheet thickness	0.086 to 0.107 mm
Overall paper thickness	0.115 to 0.145 mm
Moisture content	4 to 6 % (composite)

Hagaki (Cardstock)

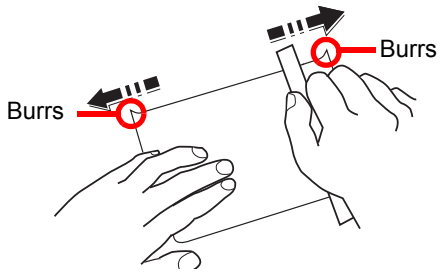

Before loading Hagaki (Cardstock) into the multipurpose tray, fan them and align the edges. If the Hagaki (Cardstock) paper is curled, straighten it before loading. Printing onto curled Hagaki (Cardstock) may cause jams.

Use unfolded Oufuku hagaki (Return postcard) (available at post offices). Some Hagaki (Cardstock) may still have rough edges developed by a paper cutter on the back side. Remove any such rough edges by placing the Hagaki (Cardstock) on a flat surface and rubbing the edges gently a few times with a ruler.

Envelopes

Envelopes should be fed from the multipurpose tray.

Due to the structure of envelopes, printing evenly over the entire surface may not be possible in some cases. Thin envelopes in particular may be wrinkled by the machine in some cases as they pass through. Before purchasing envelopes in volume, try testing a sample to ensure the print quality.

Storing envelopes for a long period may cause them to become wrinkled. Thus, keep the package sealed until you are ready to use them.

Keep the following points in mind.

- Do not use envelopes with exposed adhesive. In addition, do not use the type of envelope in which the adhesive is exposed after the top layer is peeled off. Serious damage may be caused if the paper covering the adhesive comes off in the machine.
- Do not use envelopes with certain special features. For example, do not use envelopes with a grommet for winding a string to close the flap or envelopes with an open or film-covered window.
- If paper jams occur, load fewer envelopes at once.

Thick Paper

Before loading thick paper, fan it and align the edges. Some thick paper may still have rough edges developed by a paper cutter on the back side. Remove any such rough edges just as with Hagaki (Cardstock) by placing the paper on a flat surface and rubbing the edges gently a few times with a ruler. Printing onto paper with rough edges may cause jams.

NOTE

If the paper is not supplied correctly even after it is smoothed, load the paper with the leading edge raised a few millimeters.

Colored Paper

Colored paper must conform to the specifications.

Basic Paper Specifications (page 11-13)

In addition, the pigments in the paper must be able to withstand the heat of printing (up to 200°C or 392°F).

Preprinted Paper

Preprinted paper must conform to the specifications.

Basic Paper Specifications (page 11-13)

The colored ink must be able to withstand the heat of printing. It must be resistant to silicone oil as well. Do not use paper with a treated surface such as glossy paper used for calendars.

Recycled Paper

Recycled paper must conform to the specifications; however, its whiteness may be considered separately.

Basic Paper Specifications (page 11-13)

NOTE

Before purchasing recycled paper in volume, try testing a sample to ensure satisfactory print quality.

Specifications

IMPORTANT

Specifications are subject to change without notice.

NOTE

For more information on using the FAX, refer to the following:

FAX Operation Guide

Machine

Item		Description
Type		Desktop
Printing Method		Electrophotography by semiconductor laser
Paper Weight	**Cassette**	60 to 163 g/m^2
	Multipurpose Tray	60 to 220 g/m^2, 209 g/m^2 (Cardstock)
Paper Type	**Cassette**	Plain, Rough, Vellum, Recycled, Preprinted, Bond, Color, Prepunched, Letterhead, Thick, High Quality,Custom 1 to 8 (Duplex: Same as Simplex)
	Multipurpose Tray	Plain, Transparency (OHP film), Rough, Labels, Recycled, Vellum, Preprinted, Bond, Cardstock, Color, Prepunched, Letterhead, Envelope, Thick, High Quality, Custom 1 to 8
Paper Size	**Cassette**	A4, A5-R, A5, A6, B5, Letter, Legal, Statement, Executive,Oficio II, Folio, 216 × 340 mm, 16K, B5(ISO), Custom (105 × 148 mm to 216 × 356 mm)
	Multipurpose Tray	A4, A5-R, A5, A6, B5, B6, Folio, 216 × 340 mm, Letter, Legal, Statement, Executive, Oficio II, 16K, B5(ISO), Envelope #10, Envelope #9, Envelope #6 3/4, Envelope Monarch, Envelope DL, Envelope C5, Hagaki (Cardstock), Oufuku Hagaki (Return postcard), Youkei 4, Youkei 2, Custom (70 × 148 mm to 216 × 356 mm)
Printable area		Print margin for top, bottom and both sides is 4.2 mm.
Warm-up Time 23°C/73.4°F, 60 %	**Power on**	17 seconds or less
	Sleep	10 seconds or less
Paper Capacity	**Cassette**	250 sheets (80 g/m^2)*1
	Multipurpose Tray	100 sheets (A4/Letter or smaller) (80 g/m^2)
Output Tray Capacity	**Inner tray**	150 sheets (80 g/m^2)
Image Write System		Semiconductor laser and electrophotography
Memory		512 MB
Interface		USB Interface Connector: 1 (Hi-Speed USB) Network interface: 1 (10 BASE-T/100 BASE-TX/1000 BASE-T) USB Port: 1 (Hi-Speed USB) Fax: 1*2

*1 Up to upper limit height line in the cassette.
*2 Only ECOSYS M2735dn

Item		Description
Operating Environment	**Temperature**	10 to 32.5°C/50 to 90.5°F
	Humidity	10 to 80 %
	Altitude	3,500 m/11,482 ft maximum
	Brightness	1,500 lux maximum
Dimension (W × D × H)		16.42" × 16.23" × 17.21" 417 × 412 × 437 mm
Weight (without toner container)		Approx. 41.9 lb/Approx. 19 kg
Space Required (W × D) **(Using multipurpose tray)**		14.77" × 28.47" 375 × 723 mm
Power Source		230 V Specification Model: 220 to 240 V ∿ 50/60 Hz 4.4 A
The power consumption of the product in networked standby (If all network ports are connected.)		The information is available at the website below. **http://www.kyoceradocumentsolutions.eu/index/environment/green_products/low_power_consumption.html**
Options		Optional Equipment (page 11-2)

Copy Functions

Item		Description
Copy Speed	**ECOSYS M2235dn/ ECOSYS M2735dn**	A4/A5 35 sheets/min Letter 37 sheets/min Legal 30 sheets/min B5 24 sheets/min A5-R 17 sheets/min A6 17 sheets/min 16K 20 sheets/min
First Copy Time (A4, place on the platen, feed from Cassette)		6.9 seconds or less
Zoom Level		Manual mode: 25 to 400%, 1% increments Auto mode: Preset Zoom
Continuous Copying		1 to 999 sheets
Resolution		600 × 600 dpi
Supported Original Types		Sheet, Book, 3-dimensional objects (maximum original size: Legal/ Folio)
Original Feed System		Fixed

Printer Functions

Item	Description
Printing Speed	Same as Copying Speed.
First Print Time (A4, feed from Cassette)	6.8 seconds or less
Resolution	300dpi x 300 dpi, 600 dpi x 600 dpi, 1200 dpi equivalent x 1200 dpi equivalent, 1800 dpi equivalent x 600 dpi
Operating System	Windows Vista, Windows 7, Windows 8, Windows 8.1, Windows 10, Windows Server 2008/R2, Windows Server 2012/R2, Windows Server 2016, Mac OS 10.5 or later
Interface	USB Interface Connector: 1 (Hi-Speed USB) Network interface: 1 (10 BASE-T/100 BASE-TX/1000 BASE-T)
Page Description Language	PRESCRIBE
Emulations	PCL6 (PCL-XL, PCL5c), KPDL3 (PostScript3 compatible), PDF, XPS, OpenXPS

Scanner Functions

Item	Description
Resolution	300 × 300 dpi, 200 × 200 dpi, 200 × 100 dpi, 600 × 600 dpi, 400 × 400 dpi, 200 × 400 dpi
File Format	TIFF (MMR/JPEG compression), JPEG, PDF (MMR/JPEG compression), XPS, High compressive PDF, PDF/A-1
Scanning Speed[*1]	1-sided B/W 40 Images/min Color 23 Images/min (A4 landscape, 300 × 300 dpi, Image quality: Text/Photo original)
Interface	Ethernet (10 BASE-T/100 BASE-TX/1000 BASE-T), USB
Transmission System	SMBv3, SMTP, FTP, FTP over SSL, USB, TWAIN, WIA, WSD

*1 When using the document processor (except TWAIN and WIA scanning)

Document Processor

Item	Description
Supported Original Types	Sheet originals
Paper Size	Maximum: Folio/Legal Minimum: Statement/A6
Paper Weight	50 to 160 g/m^2
Loading Capacity	50 sheets (50 to 80 g/m²) maximum*1 Thick (120 g/m^2): 25 sheets

*1 Up to upper limit height line in the document processor

Paper Feeder

Item	Description
Paper Supply Method	Friction roller feeder (No. Sheets: 250, 80 g/m^2, 1 cassette)
Paper Size	A4, A5-R, A5, B5, A6, Letter, Legal, Folio, 216 × 340 mm, Statement, Executive, Oficio II, 16K, B5 (ISO), Custom (105 × 148 to 216 × 356 mm)
Supported Paper	Paper weight: 60 to 163 g/m² Media types: Plain, Recycled, Special Paper
Dimensions **(W) × (D) × (H)**	14.77" × 15.48" × 3.94" 375 × 393 × 100 mm
Weight	Approx. 6.4 lb/Approx. 2.9 kg

NOTE

Consult your dealer or service representative for recommended paper types.

Glossary

Accessibility

The machine is designed featuring good accessibility even for the elderly and those who are physically challenged or visually impaired.

Apple Talk

AppleTalk offers file sharing and printer sharing and it also enables you to utilize application software that is on another computer on the same AppleTalk network.

Auto Form Feed Timeout

During data transmission, the machine may sometimes have to wait until receiving the next data. This is the auto form feed timeout. When the preset timeout passes, the machine automatically prints output. However, no output is performed if the last page has no data to be printed.

Auto-IP

Auto-IP is a module that enables dynamic IPv4 addresses to be assigned to a device on startup. However, DHCP requires a DHCP server. Auto-IP is a server-less method of choosing an IP address. IP addresses between 169.254.0.0 to 169.254.255.255 are reserved for Auto-IP and assigned automatically.

Auto Paper Selection

A function to automatically select paper in the same size as originals when printing.

Auto Sleep

A mode designed for electrical power saving, activated when the machine is left unused or there is no data transfer for a specific period. In Sleep mode, power consumption is kept to a minimum.

Bonjour

Bonjour, also known as zero-configuration networking, is a service that automatically detects computers, devices and services on an IP network. Bonjour, because an industry-standard IP protocol is used, allows devices to automatically recognize each other without an IP address being specified or DNS server being set. Bonjour also sends and receives network packets by UDP port 5353. If a firewall is enabled, the user must check that UDP port 5353 is left open so that Bonjour will run correctly. Some firewalls are set up so as to reject only certain Bonjour packets. If Bonjour does not run stably, check the firewall settings and ensure that Bonjour is registered on the exceptions list and that Bonjour packets are accepted. If you install Bonjour on WindowsVista or later, the Windows firewall will be set up correctly for Bonjour.

Default Gateway

This indicates the device, such as a computer or router, that serves as the entrance/exit (gateway) for accessing computers outside the network that you are on. When no specific gateway is designated for a destination IP address, data is sent to the host designated as the Default Gateway.

DHCP (Dynamic Host Configuration Protocol)

Dynamic Host Configuration Protocol (DHCP) that automatically resolves IP addresses, subnet masks, and gateway addresses on a TCP/IP network. DHCP minimizes the load of network management employing a large number of client computers because it relieves individual clients including printers from the IP address being assigned.

DHCP (IPv6)

DHCP (IPv6) is the next-generation of the Internet's Dynamic Host Configuration Protocol and supports IPv6. It extends the BOOTP startup protocol that defines the protocols used for transferring configuration information to hosts on the network. DHCP (IPv6) permits the DHCP server to use its expanded functionality to send configuration parameters to an IPv6 node. Because the network addresses that can be used are allocated automatically, the IPv6 node management workload is reduced in systems where the administrator has to exercise close control over IP address allocation.

dpi (dots per inch)

A unit for resolution, representing the number of dots printed per inch (25.4 mm).

EcoPrint Mode

A printing mode that helps save toner. Copies made in this mode are thus lighter than normal.

Emulation

The function to interpret and execute other printers' page description languages. The machine emulates operation of PCL6, KPDL3 (PostScript 3 compatible).

Enhanced WSD

Proprietary web services.

FTP (File Transfer Protocol)

A protocol to transfer files on the TCP/IP network, whether the Internet or an intranet. Along with HTTP and SMTP/POP, FTP is now frequently used on the Internet.

Grayscale

A computer color expression. Displayed images of this sort are typically composed of shades of gray, varying from black at the weakest intensity to white at the strongest, without any other colors. Gray levels are displayed in numerical levels: that is, white and black only for 1 bit; 256 gray levels (including white and black) for 8 bits; and 65,536 gray levels for 16 bits.

Help

A [**Help**] key is provided on this machine's operation panel. If you are unsure of how to operate the machine, would like more information on its functions or are having problems getting the machine to work properly, press the [**Help**] key to view a detailed explanation on the message display.

IP Address

An Internet protocol address is a unique number that represents a specific computer or related device on the network. The format of an IP address is four sets of numbers separated by dots, e.g. 192.168.110.171. Each number should be between 0 and 255.

IPP

IPP (Internet Printing Protocol) is a standard that uses TCP/IP networks such as the Internet to enable print jobs to be sent between remote computers and printers. IPP is an extension of the HTTP protocol used to view websites and enables printing to be carried out via routers on printers in remote locations. It also supports the HTTP authentication mechanisms along with SSL server and client authentication as well as encryption.

Job Box

The Job Box function stores print data on the printer and allows users to print single or multiple copies of the stored data later using the printer's operation panel.

KPDL (Kyocera Page Description Language)

Kyocera's PostScript page description language compatible with Adobe PostScript Level 3.

Multipurpose (MP) Tray

The paper supply tray on the front side of the machine. Use this tray instead of the cassettes when printing onto envelopes, Hagaki (Cardstock), transparencies, or labels.

NetBEUI (NetBIOS Extended User Interface)

An interface, developed by IBM in 1985, as an update from NetBIOS. It enables more advanced functions on smaller networks than other protocols such as TCP/IP, etc. It is not suitable for larger networks due to lack of routing capabilities to choose the most appropriate routes. NetBEUI has been adopted by IBM for its OS/2 and Microsoft for its Windows as a standard protocol for file sharing and printing services.

Outline font

With outline fonts, character outlines are represented with numerical expressions and fonts can be enlarged or reduced in different ways by changing the numeric values of those expressions. Printing remains clear even if you enlarge fonts, since the characters are defined with outlines represented with numerical expressions. You can specify the font size in steps of 0.25 points up to 999.75 points.

PDF/A

This is "ISO 19005-1. Document management - Electronic document file format for long-term preservation - Part 1: Use of PDF (PDF/A)", and is a file format based on PDF 1.4. It has been standardized as ISO 19005-1, and is a specialization of PDF, which has been mainly used for printing, for long-term storage. A new part, ISO 19005-2 (PDF/A-2), is currently being prepared.

POP3 (Post Office Protocol 3)

A standard protocol to receive E-mail from the server in which the mail is stored on the Internet or an intranet.

PostScript

A page description language developed by Adobe Systems. It enables flexible font functions and highly-functional graphics, allowing higher quality printing. The first version called Level 1 was launched in 1985, followed by Level 2 that enabled color printing and two-byte languages (e.g. Japanese) in 1990. In 1996, Level 3 was released as an update for the Internet access and PDF format as well as gradual improvements in implementation technologies.

PPM (prints per minute)

This indicates the number of A4 size printouts made in one minute.

Printer Driver

The software to enable you to print data created on any application software. The printer driver for the machine is contained in the DVD enclosed in the package. Install the printer driver on the computer connected to the machine.

RA(Stateless)

The IPv6 router communicates (transmits) information such as the global address prefix using ICMPv6. This information is the Router Advertisement (RA).

ICMPv6 stands for Internet Control Message Protocol, and is a IPv6 standard defined in the RFC 2463 "Internet Control Message Protocol (ICMPv6) for the Internet Protocol Version 6 (IPv6) Specification".

RAM Disk

Using part of the printer's memory as a virtual disk, you can set any amount of memory from overall printer memory as a RAM disk in order to use features such as electronic sorting (shortening print time).

Send as E-mail

A function to send the image data stored in the machine as an E-mail attachment. E-mail addresses can be selected from the list or entered at each time.

SMTP (Simple Mail Transfer Protocol)

A protocol for E-mail transmission over the Internet or an intranet. It is used for transferring mail between mail servers as well as for sending mail from clients to their servers.

Status Page

The page lists machine conditions, such as the memory capacity, total number of prints and scans, and paper source settings.

Subnet Mask

The subnet mask is a way of augmenting the network address section of an IP address.

A subnet mask represents all network address sections as 1 and all host address sections as 0. The number of bits in the prefix indicates the length of the network address. The term "prefix" refers to something added to the beginning and, in this context, indicates the first section of the IP address. When an IP address is written, the length of the network address is indicated by the prefix length after a forward slash (/). For example, "24" in the address "133.210.2.0/24". In this way, "133.210.2.0/24" denotes the IP address "133.210.2.0" with a 24-bit prefix (network section). This new network address section (originally part of the host address) made possible by the subnet mask is referred to as the subnet address. When you enter the subnet mask, be sure to set the "DHCP" setting to "Off".

TCP/IP (Transmission Control Protocol/Internet Protocol)

TCP/IP is a suite of protocols designed to define the way computers and other devices communicate with each other over a network.

TCP/IP (IPv6)

TCP/IP (IPv6) is based on the current Internet protocol, TCP/IP (IPv4). IPv6 is the next-generation Internet protocol and expands the available address space, which resolves the problem of the lack of addresses under IPv4, while also introducing other improvements such as additional security functionality and the capacity to prioritize data transmission.

TWAIN (Technology Without An Interesting Name)

A technical specification for connecting scanners, digital cameras, and other image equipment to computers. The TWAIN compatible devices enable you to process image data on any relevant application software. TWAIN is adopted on a large amount of graphic software (e.g. Adobe Photoshop) and OCR software.

USB (Universal Serial Bus) 2.0

A USB interface standard for Hi-Speed USB 2.0. The maximum transfer rate is 480 Mbps. This machine is equipped with USB 2.0 for high-speed data transfer.

WIA (Windows Imaging Acquisition)

A function to import images supported after Windows Me/XP from digital cameras and other peripheral devices. This function replaces what TWAIN used to do. The feature is provided as a part of Windows functions and improves ease of operation, so that you import images directly to My Computer without using any application.

Index

A

Accessibility 11-25
Address Book 3-18
  Adding 3-18
  Contact 3-18
  Editing and Deleting 3-23
  Group 3-21
Adjustment/Maintenance 8-34
  Print Density 8-34
AirPrint 4-9
Anti-theft Lock Slot 2-3
Apache License (Version 2.0) 1-10
Apple Talk 11-25
Auto Error Clear 8-23
Auto Form Feed Timeout 11-25
Auto Panel Reset 8-22
Auto Paper Selection 11-25
Auto Sleep 2-21, 11-25
AutoColorCorrect 8-34
Auto-IP 11-25
  Settings 8-7
Automatic 2-Sided Print Function 1-13

B

Background Density Adjustment 6-20, 8-34
  Default 8-24
Bonjour 11-25
  Settings 8-8
Border Line 6-13
  Default 8-25

C

Cables 2-7
Card Authentication Kit 11-4
Cassette
  Loading Paper 3-4
  Paper Size and Media Type 8-19
Cassette 1 2-2
Cassette 2 2-6
Cassette 3 2-6
Character Entry Method 11-8
Checking the Counter 2-37
Checking the Remaining Amount of Toner 7-15
Cleaning 10-2
  Glass Platen 10-2
  Machine 10-4
  Slit Glass 10-3
Collate 6-9
  Default 8-24
Color Selection 6-19
  Default 8-24
Combine 6-13
Command Center RX 2-39
Common Settings 8-15
  Date Setting 8-21
  Default Screen 8-15
  Display Brightness 8-15
  Display Status/Log 8-27
  Error Handling 8-21
  Format SD Card 8-26
  Function Defaults 8-24
  Language 8-15
  Login Operation 8-26
  Low Toner Alert 8-27
  Measurement 8-20
  Optional Memory 8-26
  Orig./Paper Set. 8-16
  Preset Limit 8-20
  RAM Disk Mode 8-26
  Sound 8-15
  Timer Setting 8-22
  USB Keyboard Type 8-27
Configuration Tool 4-21
  Accessing 4-21
  Exiting 4-22
  Settings 4-23
Connecting
  LAN Cable 2-8
  Power Cable 2-9
  USB cable 2-9
Connection Method 2-7
Continuous Scan 6-17
  Default 8-24, 8-25
Contrast 6-20, 8-34
Contrast (Copy) 8-34
Contrast (Send) 8-34
Conventions Used in This Guide xix
Copy 5-12
Copy Denst. Adj. 8-34
Copy Settings 8-28
  Auto % Priority 8-28
  AutoPaperSelect. 8-28
  DP Read Action 8-28
  Paper Selection 8-28
  Select Key Setting 8-28
Copy Speed 11-22
Correct. Bk Line 8-34
Counting the Number of Pages Printed
  Counter 2-37
  Each Job Account 9-36
  Print Accounting Report 9-37
  Total Accounting 9-36
  Unknown ID Job 9-39

D

Date Format 8-21
Date Setting
  Date Format 8-21
  Date/Time 8-21
  Summer Time 8-21
  Time Zone 8-21
Date/Time 8-21

Date/Timer/Energy Saver
EnergySaver RecoveryLevel 8-28
Default Gateway 11-25
Settings 8-7
Default Screen 8-15
Density 6-17
Destination
Adding a Destination 3-18
Address Book 5-30
Checking and Editing 5-34
Confirmation Screen of Destinations 5-34
Destination Check 8-31
Multi Sending 5-27
One Touch Key 3-25
Search 5-31, 5-32
Sort 8-33
Destination Check
Check before Send 8-31
Check New Destination 8-31
Device 7-14
DHCP 11-25
Settings 8-7
DHCP (IPv6) 11-26
Settings 8-8
Display Brightness 8-15
Display Status/Log 8-27
Document Box
Job Box 4-10, 5-36
Removable Memory Box 5-36
Document Box Settings 8-32
Job Box 8-32
Polling Box 8-32
Select Key Setting 8-32
Sub Address Box 8-32
Document Processor 2-2
Loading Originals 5-3
Originals Not Supported by the Document Processor 5-3
Originals Supported by the Document Processor 5-3
Part Names 2-2
dpi 11-26
Duplex 6-9

E

EcoPrint 6-17, 11-26
Default 8-24
Printer 8-29
Edit Destination 8-33
Address Book 3-18
Address Book Defaults 8-33
Contact 3-18
Group 3-21
One Touch Key 3-25
E-mail Settings 2-45
E-mail Subject/Body 6-27
Default 8-24
Emulation 11-26
Selection 8-29
Encrypted PDF 6-28
Energy Saver Recovery Level 8-28
Energy Saving Control Function 1-13
Energy Star (ENERGY STAR®) Program 1-13
Enhanced WSD 11-26
Protocol Settings 8-11
EnhancedWSD (SSL)
Protocol Settings 8-11
Entry
File Name 6-18
Subject 6-27
Environment 1-3
Err. Clear Timer 8-23
Error Handling 8-21
eSCL
Protocol Settings 8-11
eSCL over SSL
Protocol Settings 8-12
Expansion Memory 11-3

F

FAX 8-32
Feed Cover 2-4
File
Format 6-23
PDF 6-25
Separation 6-27
File Format 6-23
Default 8-25
File Name Entry 6-18
Default 8-24
File Separation 6-27
Default 8-25
Finishing Binding 6-10
First Copy Time 11-22
First Print Time 11-23
Format SD Card 8-26
Front Cover Open Button 2-2
FTP 11-26
FTP (Clien)
Protocol Settings 8-9
FTP (Server)
Protocol Settings 8-9
FTP Encrypted TX 6-27
Function Defaults 8-24
Fuser Cover 2-4

G

Glossary 11-25
Google Cloud Print 4-9
GPL/LGPL 1-8
Grayscale 11-26
Group Authorization Set. 9-15
Group Authorization 9-15
Group Authorization Settings 9-15
Guest Authorization Set. 9-16
Guest Authorization 9-16
Guest Property 9-17
Guides Provided with the Machine xvi

H

Help 11-26
Help Screen 2-14
High Compression PDF 6-24
Host Name 8-7
HTTP
  Protocol Settings 8-10
HTTPS
  Protocol Settings 8-10

I

I/F Block Set. 8-12
Image Quality 6-23
Inner Tray 2-2
Install
  Macintosh 2-32
  Software 2-24
  Uninstalling 2-31
  Windows 2-25
IP Address 11-26
  Settings 8-7
IPP 11-26
  Protocol Settings 8-10
IPP over SSL
  Protocol Settings 8-10
IPSec
  Settings 8-8

J

Job
  Available Status 7-2
  Canceling 7-13
  Checking History 7-8
  Checking Status 7-2
  Displaying History Screen 7-9
  Displaying Status Screens 7-2
  Pause and Resumption 7-13
  Sending the Log History 7-12
Job Accounting 9-23
  Adding an Account 9-26
  Counting the Number of Pages Printed 9-36
  Default Setting 9-35
  Deleting an Account 9-30
  Editing an Account 9-29
  Enabling Job Accounting 9-24
  FAX Driver 9-34
  Job Accounting Access 9-25
  Login 9-38
  Logout 9-38
  Overview of Job Accounting 9-23
  Print Accounting Report 9-37
  Printing 9-31
  Restricting the Use of the Machine 9-28
  TWAIN 9-32
  WIA 9-33
Job Box 11-27
  Deletion of Job Retention 8-32
  Private Print Box 4-11
  Proof and Hold Box 4-15
  Quick Copy Box 4-14
  Quick Copy Jobs 8-32
  Specifying the Job Box from a Computer and Storing the Job 4-10
  Stored Job Box 4-12
Job Finish Notice 6-18
JPEG/TIFF Print 6-29
  Default 8-25

K

Knopflerfish License 1-10
KPDL 11-27

L

Label 11-18
LAN Cable 2-7
  Connecting 2-8
Language 8-15
LDAP
  Protocol Settings 8-10
Legal Information 1-7
Legal Restriction on Copying 1-6
Legal Restriction on Scanning 1-6
LINE Connector 2-4
Loading Originals 5-2
  Loading Originals in the Document Processor 5-3
  Placing Originals on the Platen 5-2
Login 2-15
Login Operation 8-26
Logout 2-16
Low Toner Alert 8-27
LPD
  Protocol Settings 8-10

M

Maintenance Menu 10-11
Management 9-1
Manual Settings (IPv6) 8-8
Measurement 8-20
Media Type Setting 8-20
Mixed Size Originals 6-16
Monotype Imaging License Agreement 1-9
Mopria 4-9
MP Tray Settings 8-19
Multi Sending 5-27
Multipurpose Tray 2-4, 11-27
  Paper Size and Media Type 8-19

N

NetBEUI 11-27
  Protocol Settings 8-9
Network
  Preparation 2-18
  Settings 8-7
Network Interface 2-7

Network Interface Connector 2-4
Notice 1-2

O

One Touch Key
Adding 3-25
Editing and Deleting 3-26
OpenSSL License 1-8
Operation Panel 2-2
Option
Card Authentication Kit 11-4
Expansion Memory 11-3
Overview 11-2
Paper Feeder (500-sheet) 11-4
SD/SDHC Memory Card 11-4
ThinPrint Option 11-4
USB Keyboard 11-5
Optional Applications 11-6
Optional Function 8-13
Optional Memory 8-26
Orig./Paper Set. 8-16
Original
Auto Detect Original Size (DP) 8-16
Custom Orig. Size 8-16
Default Original Size 8-16
Settings 8-16
Size xx
Original eject table 2-2
Original Image 6-16
Default 8-24
Original Orientation 6-15
Default 8-24
Original Size 6-15
Original Size Indicator Plates 2-2
Original SSLeay License 1-8
Original Stopper 2-2
Original Table 2-2
Original Width Guides 2-2
Outline font 11-27

P

Panel Reset Timer 8-22
Paper
Checking the Remaining Amount of Paper 7-15
Appropriate Paper 11-14
Cassette 8-19
Custom Paper Size 8-17
Default Paper Source 8-18
Loading Cardstock 5-7
Loading Envelopes 5-7
Loading Paper 3-2
Loading Paper in the Cassettes 3-4
Media for Auto 8-17
Media Type Setting 8-17
Multipurpose Tray 8-19
Size and Media Type 11-13
Special Paper 11-17
Special Paper Action 8-18
Specifications 11-13
Weight 8-20
Paper Feed Mode 8-30
Paper Feeder (500-sheet) 11-4
Paper Jams 10-30
Cassette 1 10-31
Cassette 2 10-31
Cassette 3 (500-sheet x 2) 10-35
Document Processor 10-46
Inside of the Machine 10-38
Jam Location Indicators 10-30
Multipurpose Tray 10-37
Rear Cover 1 10-42
Paper Length Guide 2-4, 3-4
Paper Selection 6-8
Paper Stopper 2-2, 3-7
Paper Width Guides 2-4, 3-4
Part Names 2-2
PDF/A 6-23, 11-27
Ping 8-12
Platen 2-2
POP3 11-27
Protocol Settings 8-10
PostScript 11-27
Power Cable
Connecting 2-9
Power Management 1-13
Power Off 2-10
Power On 2-10
Power Switch 2-2
PPM 11-27
Precaution for Loading Paper 3-4
Precautions for Use 1-4
Preset Limit 8-20
Print Density 8-34
Print Settings 4-2, 4-8
Printer 8-29
Auto Cassette Change 8-30
Copies 8-29
CR Action 8-29
Duplex 8-29
EcoPrint 8-29
Emulation Set. 8-29
Form Feed TimeOut 8-29
Job Name 8-30
LF Action 8-29
MP Tray Priority 8-30
Orientation 8-29
Override A4/Letter 8-29
Paper Feed Mode 8-30
Print setting 4-2
User Name 8-30
Wide A4 8-29
Printer Driver 11-27
Help 4-3
Printing Documents Stored in Removable USB Memory 5-37
Printing from PC 4-4
Printing Speed 11-23
Priority Override 6-18
Product Library xvii

Program 5-8
Deleting 5-10
Overwriting 5-10
Recalling 5-9
Registering 5-8

R

RA (Stateless) 11-27
RA(Stateless)
Settings 8-8
RAM Disk 11-28
RAM Disk Mode 8-26
Raw
Protocol Settings 8-10
Rear Cover 1 2-3
Recycled Paper 11-20
Regarding Trade Names 1-7
Regular Maintenance 10-2
Toner Container Replacement 10-7
Report 8-5
Admin Report Settings 8-6
Job Log History 8-6
Report Print 8-5
Result Report Settings 8-6
Report Print
Font List 8-5
Menu Map 8-5
Status Page 8-5
Resolution 6-21, 11-22, 11-23
Resource Saving - Paper 1-13
Responding to Messages 10-18
Restart 8-13
Restart Network 8-12

S

Safety Conventions in This Guide 1-2
Saving Documents to USB Memory 5-39
Scan Resolution 6-21
Default 8-24
SD Card 11-4
Format 8-26
SD/SDHC Memory Card 11-4
Secure Settings 8-12
Security Level 8-12
Select Key Setting 8-28, 8-31, 8-32
Send and Forward 8-31
Send as E-mail 5-14
Send Result 8-6
Send Settings 8-31
Default Screen 8-31
Destination Check 8-31
New Destination Entry 8-31
Recall Destination 8-31
Select Key Setting 8-31
Send and Forward 8-31
Send to Folder (FTP) 5-14
Send to Folder (SMB) 5-14
Send/Box Density 8-34
Sending 5-14
Preparation for Sending a Document to a PC 3-8
Sending Size 6-22
Service Setting 8-34
Setting Date and Time 2-17
Sharpness 6-19
Skip Blank Page 6-21
Sleep 2-20
Sleep Level 2-22, 8-22
Sleep Rules 2-21, 8-22
Sleep Timer 8-22
Slit Glass 2-2
SMB
Protocol Settings 8-10
SMTP 11-28
Protocol Settings 8-10
SNMPv1/v2c
Protocol Settings 8-10
SNMPv3
Protocol Settings 8-9
Solving Malfunctions 10-12
Sound 8-15
Specifications 11-21
Copy Functions 11-22
Document Processor 11-24
Machine 11-21
Paper Feeder (500-sheet) 11-24
Printer Functions 11-23
Scanner Functions 11-23
SSL 8-12
Status Page 11-28
Status/Job Cancel 7-1
Storing Size 6-28
Subject/Body
Default 8-24
Subnet Mask 11-28
Settings 8-7
Supplies
Checking the Remaining Amount 7-15
Symbols 1-2
System Menu 8-2
Adjustment/Maintenance 8-34
Common Settings 8-15
Copy 8-28
Document Box 8-32
Edit Destination 8-33
FAX 8-32
Operation Method 8-2
Printer 8-29
Report 8-5
Send 8-31
System/Network 8-7
User Login/Job Accounting 8-14
User Property 8-14, 9-10
System/Network 8-7
I/F Block Set. 8-12
Network Setting 8-7
Optional Function 8-13
Restart 8-13
Security Level 8-12

T

TCP/IP 11-28
  Settings 8-7
TCP/IP (IPv4)
  Settings 2-18, 8-7
TCP/IP (IPv6) 11-26
  Settings 8-8
TEL Connector 2-4
Thin Print over SSL
  Protocol Settings 8-10
ThinPrint
  Protocol Settings 8-10
ThinPrint Option 11-4
Time Zone 8-21
Timer Setting
  Auto Error Clear 8-23
  Auto Panel Reset 8-22
  Err. Clear Timer 8-23
  PanelReset Timer 8-22
  Ping Timeout 8-23
  Sleep Level 8-22
  Sleep Rules 8-22
  Sleep Timer 8-22
  Unusable Time 8-23
Toner Container Replacement 10-7
Tray Extension 2-4
Troubleshooting 10-12
TWAIN 11-28
  Setting TWAIN Driver 2-34

U

USB 11-28
USB Cable
  Connecting 2-9
USB Interface 2-7
USB Interface Connector 2-4
USB Keyboard 11-5
USB Keyboard Type 8-27
USB Memory
  Printing 5-37
  Remove 5-40
  Save 5-39
USB Memory Slot 2-4
User Login Administration 9-2
  Adding a User 9-6
  Changing User Properties 9-8
  Enabling User Login Administration 9-3
  FAX Driver 9-14
  Group Authorization Settings 9-15
  Guest Authorization Set. 9-16
  ID Card Settings 9-20
  Login 2-15
  Logout 2-16
  Obtain NW User Property 9-19
  Overview of User Login Administration 9-2
  Printing 9-11
  TWAIN 9-12
  User Account Lockout Setting 9-5
  WIA 9-13
User Login/Job Accounting 8-14
  Job Accounting 9-23
  Unknown ID Job 9-39
  User Login 9-2
User Property 8-14

W

WIA 11-29
  Setting WIA Driver 2-36
WPS 11-29
WSD Scan 5-22
WSD-PRINT
  Protocol Settings 8-11
WSD-SCAN
  Protocol Settings 8-11

X

XPS Fit to Page 6-29
XPS FitTo Page
  Default 8-25

Z

Zoom 6-11
  Default 8-24


QUALITY
CERTIFICATE
This machine has passed
all quality controls and
final inspection

KYOCERA Document Solutions America, Inc.

Headquarters
225 Sand Road,
Fairfield, New Jersey 07004-0008, USA
Phone: +1-973-808-8444
Fax: +1-973-882-6000

Latin America
8240 NW 52nd Terrace Dawson Building, Suite 100
Miami, Florida 33166, USA
Phone: +1-305-421-6640
Fax: +1-305-421-6666

KYOCERA Document Solutions Canada, Ltd.
6120 Kestrel Rd., Mississauga, ON L5T 1S8,
Canada
Phone: +1-905-670-4425
Fax: +1-905-670-8116

KYOCERA Document Solutions
Mexico, S.A. de C.V.
Calle Arquimedes No. 130, 4 Piso, Colonia Polanco
Chapultepec, Delegacion Miguel Hidalgo,
Distrito Federal, C.P. 11560, México
Phone: +52-555-383-2741
Fax: +52-555-383-7804

KYOCERA Document Solutions Brazil, Ltda.
Alameda África, 545, Pólo Empresarial Consbrás,
Tamboré, Santana de Parnaíba, State of São Paulo, CEP
06543-306, Brazil
Phone: +55-11-2424-5353
Fax: +55-11-2424-5304

KYOCERA Document Solutions Chile SpA
Jose Ananias 505, Macul. Santiago, Chile
Phone: +562-2350-7000
Fax: +562-2350-7150

KYOCERA Document Solutions
Australia Pty. Ltd.
Level 3, 6-10 Talavera Road North Ryde N.S.W, 2113,
Australia
Phone: +61-2-9888-9999
Fax: +61-2-9888-9588

KYOCERA Document Solutions
New Zealand Ltd.
Ground Floor, 19 Byron Avenue, Takapuna, Auckland,
New Zealand
Phone: +64-9-415-4517
Fax: +64-9-415-4597

KYOCERA Document Solutions Asia Limited
Unit 3 & 5, 16/F.,Mita Centre, 552-566, Castle Peak Road
Tsuen Wan, New Territories, Hong Kong
Phone: +852-2496-5678
Fax: +852-2610-2063

KYOCERA Document Solutions
(China) Corporation
8F, No. 288 Nanjing Road West, Huangpu District,
Shanghai,200003, China
Phone: +86-21-5301-1777
Fax: +86-21-5302-8300

KYOCERA Document Solutions
(Thailand) Corp., Ltd.
335 Ratchadapisek Road, Wongsawang, Bangsue,
Bangkok 10800,
Thailand
Phone: +66-2-586-0333
Fax: +66-2-586-0278

KYOCERA Document Solutions
Singapore Pte. Ltd.
12 Tai Seng Street #04-01A,
Luxasia Building, Singapore 534118
Phone: +65-6741-8733
Fax: +65-6748-3788

KYOCERA Document Solutions
Hong Kong Limited
Unit 1,2,4,6,8 & 10, 16/F.,Mita Centre, 552-566, Castle
Peak Road Tsuen Wan, New Territories, Hong Kong
Phone: +852-3582-4000
Fax: +852-3185-1399

KYOCERA Document Solutions
Taiwan Corporation
6F., No.37, Sec. 3, Minquan E. Rd.,
Zhongshan Dist., Taipei 104, Taiwan R.O.C.
Phone: +886-2-2507-6709
Fax: +886-2-2507-8432

KYOCERA Document Solutions Korea Co., Ltd.
#3F Daewoo Foundation Bldg 18, Toegye-ro, Jung-gu,
Seoul, Korea
Phone: +822-6933-4050
Fax: +822-747-0084

KYOCERA Document Solutions
India Private Limited
Second Floor, Centrum Plaza, Golf Course Road,
Sector-53, Gurgaon, Haryana 122002, India
Phone: +91-0124-4671000
Fax: +91-0124-4671001

KYOCERA Document Solutions Europe B.V.
Bloemlaan 4, 2132 NP Hoofddorp,
The Netherlands
Phone: +31-20-654-0000
Fax: +31-20-653-1256

KYOCERA Document Solutions Nederland B.V.
Beechavenue 25, 1119 RA Schiphol-Rijk,
The Netherlands
Phone: +31-20-5877200
Fax: +31-20-5877260

KYOCERA Document Solutions (U.K.) Limited
Eldon Court, 75-77 London Road,
Reading, Berkshire RG1 5BS,
United Kingdom
Phone: +44-118-931-1500
Fax: +44-118-931-1108

KYOCERA Document Solutions Italia S.p.A.
Via Monfalcone 15, 20132, Milano, Italy,
Phone: +39-02-921791
Fax: +39-02-92179-600

KYOCERA Document Solutions Belgium N.V.
Sint-Martinusweg 199-201 1930 Zaventem,
Belgium
Phone: +32-2-7209270
Fax: +32-2-7208748

KYOCERA Document Solutions France S.A.S.
Espace Technologique de St Aubin
Route de l'Orme 91195 Gif-sur-Yvette CEDEX,
France
Phone: +33-1-69852600
Fax: +33-1-69853409

KYOCERA Document Solutions Espana, S.A.
Edificio Kyocera, Avda. de Manacor No.2,
28290 Las Matas (Madrid), Spain
Phone: +34-91-6318392
Fax: +34-91-6318219

KYOCERA Document Solutions Finland Oy
Atomitie 5C, 00370 Helsinki,
Finland
Phone: +358-9-47805200
Fax: +358-9-47805390

KYOCERA Document Solutions Europe B.V., Amsterdam (NL) Zürich Branch
Hohlstrasse 614, 8048 Zürich,
Switzerland
Phone: +41-44-9084949
Fax: +41-44-9084950

KYOCERA Bilgitas Document Solutions Turkey A.S.
Gülbahar Mahallesi Otello Kamil Sk. No:6 Mecidiyeköy
34394 Şişli İstanbul, Turkey
Phone: +90-212-356-7000
Fax: +90-212-356-6725

KYOCERA Document Solutions Deutschland GmbH
Otto-Hahn-Strasse 12, 40670 Meerbusch,
Germany
Phone: +49-2159-9180
Fax: +49-2159-918100

KYOCERA Document Solutions Austria GmbH
Altmannsdorferstraße 91, Stiege 1, 2. OG, Top 1, 1120,
Wien, Austria
Phone: +43-1-863380
Fax: +43-1-86338-400

KYOCERA Document Solutions Nordic AB
Esbogatan 16B 164 75 Kista, Sweden
Phone: +46-8-546-550-00
Fax: +46-8-546-550-10

KYOCERA Document Solutions Norge Nuf
Olaf Helsetsv. 6, 0619 Oslo, Norway
Phone: +47-22-62-73-00
Fax: +47-22-62-72-00

KYOCERA Document Solutions Danmark A/S
Ejby Industrivej 60, DK-2600 Glostrup,
Denmark
Phone: +45-70223880
Fax: +45-45765850

KYOCERA Document Solutions Portugal Lda.
Rua do Centro Cultural, 41 (Alvalade) 1700-106 Lisboa,
Portugal
Phone: +351-21-843-6780
Fax: +351-21-849-3312

KYOCERA Document Solutions South Africa (Pty) Ltd.
KYOCERA House, Hertford Office Park,
90 Bekker Road (Cnr. Allandale), Midrand, South Africa
Phone: +27-11-540-2600
Fax: +27-11-466-3050

KYOCERA Document Solutions Russia LLC.
Building 2, 51/4, Schepkina St., 129110, Moscow,
Russia
Phone: +7(495)741-0004
Fax: +7(495)741-0018

KYOCERA Document Solutions Middle East
Dubai Internet City, Bldg. 17,
Office 157 P.O. Box 500817, Dubai,
United Arab Emirates
Phone: +971-04-433-0412

KYOCERA Document Solutions Inc.
2-28, 1-chome, Tamatsukuri, Chuo-ku
Osaka 540-8585, Japan
Phone: +81-6-6764-3555
http://www.kyoceradocumentsolutions.com

© 2017 KYOCERA Document Solutions Inc.

KYOCERA **is a trademark of KYOCERA Corporation**

KYOCERA
Document Solutions

2017.8
2VTKDEN001